宁波搏业液压科技有限公司

浙江省宁波市镇海区九龙湖镇田顾工业区清音巷77号
电话:0574-86587131
手机:13336660671
网站:www.nbboye.net

Ningbo Boye Hydraulic Technology Co., Ltd

No. 77 Qingyin Lane, Tiangu Industrial Zone, Jiulonghu Town,
Zhenhai District, Ningbo City, Zhejiang Province
Tel: +86-574-86587131
Mobile: +86-13336660671
Website: www.nbboye.net

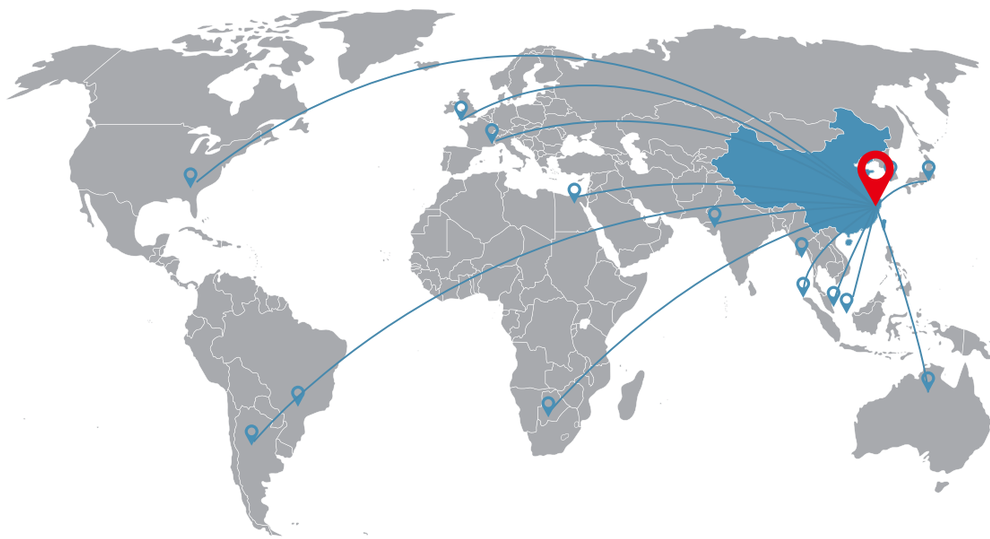

产品质量是搏业的执着，用户满意是搏业的追求

搏业液压
印刷日期BY2025-10

(扫码进入电子样册)

高性能阀用电磁铁

HIGH PERFORMANCE VALVE SOLENOID

2025–2026

BOYE

HYDRAULIC

TECHNOLOGY

宁波搏业液压科技有限公司

NINGBO BOYE HYDRAULIC TECHNOLOGY CO., LTD.

公司简介 ▼

宁波搏业液压科技有限公司创建于 2007 年，前身为宁波镇海搏业液压机电有限公司，2020 年乔迁至新厂区，现坐落于中国宁波，紧邻九龙湖 5A 级国家旅游风景区，占地面积 8000 平方米，厂房面积 16000 平方米，员工 180 多人，是一家专业设计、生产、销售各种电磁产品的实体性企业。企业先后引进、消化、吸收多个国际知名品牌产品技术，经过多年积累和不断改进，已累计销售超过 4000 万套各类电磁产品，团队拥有丰富的产品研发和生产管理经验。

企业主要产品包括 BYZ 直流湿式阀用电磁铁、BYJ 交流湿式阀用电磁铁、BYG 比例阀用电磁铁、BYM 插装阀用电磁铁、BYC 插装阀用线圈、BYT 插装阀用导磁套、BYQ 汽车线圈、BYL 线束连接器和 BYS 特殊产品等，年产能超过 600 万套。

企业坚持贯彻“产品质量是搏业的执着，用户满意是搏业的追求”这一经营理念，一如既往的为客户提供优质产品和完善服务，公司已通过了 ISO9001 质量体系认证和产品 CE 认证，产品除配套国内客户外，还远销西欧、北美、东南亚、中东等地区。

多年来企业秉承诚信经营的宗旨，不忘初心，改革创新，凭借雄厚的技术实力，先进的加工设备，完善的检测手段，稳定的产品质量，建立了一条规范化产业链，确保产品品质优良，赢得了新老客户信任和支持，企业也由此充满创新的活力，顽强拼搏的毅力，坚韧不拔的定力。

公司总经理解志坚及全体员工，衷心期待和欢迎您的加入，为中国液压事业同心协力、添砖加瓦。

COMPANY PROFILE ▼

Ningbo Boye Hydraulic Technology Co., Ltd., formerly known as Ningbo Zhenhai Boye Hydraulic Electromechanical Co., Ltd., was established in 2007. In 2020, the company relocated to its new factory in Ningbo, China, which is adjacent to the 5A-level Jiulong Lake National Scenic Area. The factory spans an area of 8,000 square meters, with a production area of 16,000 square meters, and employs over 180 staff members. We are a specialized enterprise that designs, produces, and sells a wide range of electromagnetic products. Over the years, we have introduced, assimilated, and absorbed technology from multiple internationally renowned brands. With years of accumulation and continuous improvement, we have sold over 40 million sets of various electromagnetic products, demonstrating our team's extensive experience in product research and development as well as production management.

The main products of the enterprise include BYZ DC wet valve electromagnet, BYJ AC wet valve electromagnet, BYG proportional valve electromagnet, BYM cartridge valve electromagnet, BYC cartridge valve coil, BYT cartridge valve magnetic guide sleeve, BYQ automotive coil, BYL wire harness connector and BYS special products, with an annual production capacity of over 6 million sets.

The company adheres to the business philosophy of "product quality is the persistence of the industry, and customer satisfaction is the pursuit of the industry", and continues to provide customers with quality products and perfect services. The company has passed ISO9001 quality system certification and CE certification for products. In addition to supporting domestic customers, the products are also exported to Western Europe, North America, Southeast Asia, the Middle East and other regions.

For many years, the company has adhered to the principle of integrity in business operations, remained true to its original aspiration, and embraced reform and innovation. Leveraging its strong technical expertise, advanced processing equipment, and comprehensive testing methods, coupled with its stable product quality, the company has established a standardized industrial chain. This ensures the superior quality of its products, earning the trust and support of both new and longstanding customers. Consequently, the company is filled with innovative vitality, perseverance, and unwavering determination.

The general manager of the company, Zhi Jian, and all the staff sincerely welcome you to join us and work together for the development of China's hydraulic industry.

荣誉证书 Certificate Of Honor

ISO9001 质量体系证书


CE 产品证书



专利证书

高新技术企业

办公环境 Office Environment

关键工序 Key Processes




导磁套产线
Magnetic Conductive Sleeve Production Line

线圈产线
Coil Production Line




智能制造 - 导磁套 Magnetic Conductive Sleeve

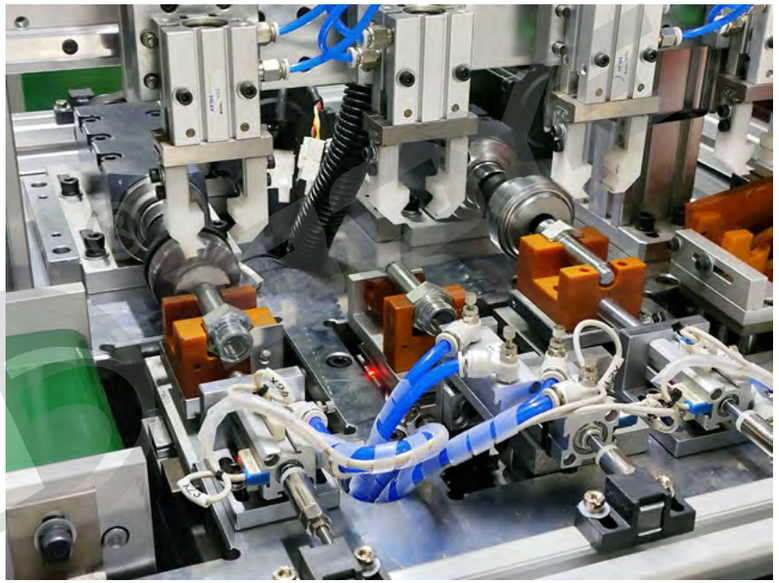

BOYE

智能制造 - 线圈 Electromagnetic Coil

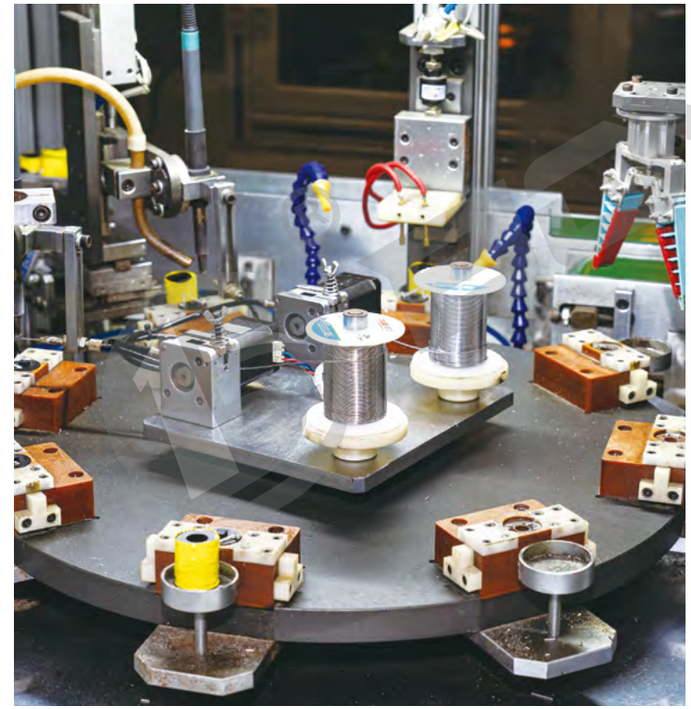

检测中心 Testing Center


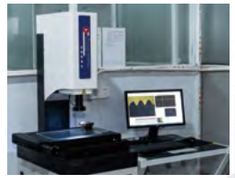

BOYE


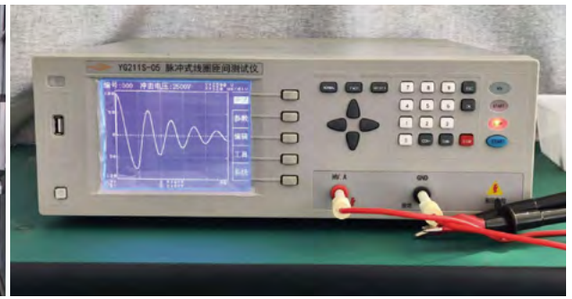


周转防护 Turnover Protection


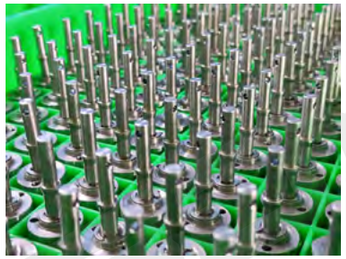







目 录 Contents

17 产品选型指南 Product Selection Guide

21 BYZ 直流湿式阀用电磁铁 DC wet valve electromagnet

BYZ09 圆形金属外壳，螺纹连接 Round metal shell, threaded connection
23 BYZ09-15 3 通径 /NG 3
27 BYZ09-20 4 通径 /NG 4
29 BYZ09-25 6 通径 /NG 6
30 BYZ09-30 5 通径 /NG 5
31 BYZ09-50 6 通径 /NG 6
42 BYZ09-60 10 通径 /NG 10
43 BYZ09-120 10 通径 /NG 10

BYZ11 塑料壳，螺纹连接 Plastic housing, threaded connection
49 BYZ11-40 6 通径 /NG 6
51 BYZ11-50 6 通径 /NG 6
55 BYZ11-90 10 通径 /NG 10

BYZ12 塑料壳，螺纹连接 Plastic housing, threaded connection
57 BYZ12-40 6 通径 /NG 6
59 BYZ12-90 10 通径 /NG 10

BYZ16 圆形金属外壳，螺纹连接 Round metal shell, threaded connection
61 BYZ16-40 4 通径 /NG 4
65 BYZ16-60 6 通径 /NG 6
67 BYZ16-90 10 通径 /NG 10

BYZ08 塑料壳，螺纹连接 Plastic housing, threaded connection
69 BYZ08-30 5 通径 /NG 5

BYZ04 塑料壳，螺纹连接 Plastic housing, threaded connection
70 BYZ04-25 ϕ25 孔

BYZ02 球阀用，螺钉连接 For ball valves, threaded connection
71 BYZ02-3C
72 BYZ02-55

BYZ03 方形线圈，螺纹连接 Square coil, plastic housing
73 BYZ03-13 ϕ13 孔
74 BYZ03-16 ϕ16 孔

75 BYJ 交流湿式阀用电磁铁 AC wet valve electromagnet

BYJ09 方形塑料壳，螺纹连接 Plastic housing, threaded connection
77 BYJ09-27 6 通径 /NG 6
78 BYJ09-54 10 通径 /NG 10

BYJ11 方形塑料壳，螺纹连接 Plastic housing, threaded connection
79 BYJ11-27 6 通径 /NG 6
81 BYJ11-54 10 通径 /NG 10

BYJ12 方形塑料壳，螺纹连接 Plastic housing, threaded connection
83 BYJ12-27 6 通径 /NG 6
85 BYJ12-54 10 通径 /NG 10

87 BYG 比例阀用电磁铁 Electromagnet for proportional valve

BYG01 螺钉连接 PQ 阀 Round metal shell, threaded connection
89 BYG01-40 压力阀用

BYG04 螺纹插装 Plastic housing, threaded connection
90 BYG04-16 PV08
91 BYG04-21 PV70/72

BYG05 螺纹比例 Plastic housing, threaded connection
95 BYG05-45 SRCB

BYG06 螺纹比例 Plastic housing, threaded connection
97 BYG06-37 5 通径 /NG5
99 BYG06-45 6 通径 /NG6

BYG07 螺纹比例 For ball valves, threaded connection
101 BYG07-37 5 通径 /NG5
109 BYG07-45 6 通径 /NG6

BYG08 螺纹插装 Square coil, plastic housing
112 BYG08-33 ϕ33 外形

BYG09 螺纹插装 Square coil, plastic housing
113 BYG09-13 ϕ13 外径
114 BYG09-16 ϕ16 外径

BYG10 螺纹插装 Square coil, plastic housing
115 BYG10-13 SP08
117 BYG10-16 SP10/12/16

BYG11 螺纹插装 Square coil, plastic housing
124 BYG11-16 HPV12

BYG12 螺纹插装 Square coil, plastic housing
125 BYG12-16 TS10

BYG14 螺纹插装 Square coil, plastic housing
129 BYG14-18 PDR08

BYG15 螺纹插装 Square coil, plastic housing
130 BYG15-37 PCV85

目 录 Contents

133 **BYM 螺纹插装阀用电磁铁** Electromagnet for threaded cartridge valve

BYM01 圆形金属外壳，螺纹连接 Round metal shell, threaded connection
135 BYM01-18 18 孔线圈

BYM08 方形线圈，螺纹连接 Square coil, plastic housing
140 BYM08-13 13 孔线圈

BYM10 圆形金属外壳，螺纹连接 Round metal shell, threaded connection
141 BYM10-40 19 孔线圈
147 BYM10-50 19 孔线圈

BYM11 圆形金属外壳，螺纹连接 Round metal shell, threaded connection
153 BYM11-40 19 孔线圈

BYM12 圆形金属外壳，螺纹连接 Round metal shell, threaded connection
157 BYM12-40 19 孔线圈

BYM13 圆形金属外壳，螺纹连接 Round metal shell, threaded connection
163 BYM13-23 23 孔线圈

BYM14 圆形金属外壳，螺纹连接 Round metal shell, threaded connection
165 BYM14-19 23 孔线圈

169 **BYC 插装阀用线圈** Cartridge valve coil

BYC01 圆形线圈，金属外壳 Circular coil, metal casing
171 BYC01-13 ϕ13 孔 SV08
174 BYC01-15 ϕ16 孔 PV08
174 BYC01-16 ϕ16 孔 SV10
176 BYC01-21 ϕ21 孔 PV70

BYC02 圆形线圈，塑料外壳 Circular coil, plastic shell
179 BYC02-11 ϕ11 孔
179 BYC02-13 ϕ13 孔 SV08
188 BYC02-14 ϕ16 孔 SV10
188 BYC02-16 ϕ16 孔 SV10

BYC03 圆形带扁线圈，塑料外壳 Plastic housing, threaded connection
190 BYC03-13 ϕ13 孔
192 BYC03-16 ϕ16 孔

BYC04 方形线圈，塑料外壳 Square coil, plastic shell
196 BYC04-13 ϕ13 孔

BYC05 方形线圈，塑料外壳 Square coil, plastic shell
200 BYC05-13 ϕ13 孔

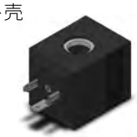

BYC06 圆形线圈，金属外壳 Round metal shell, threaded connection
205 BYC06-16 ϕ16 孔
206 BYC06-17 ϕ17 孔
206 BYC06-18 ϕ18 孔
210 BYC06-19 ϕ19 孔
217 BYC06-22 ϕ22 孔

BYC07 圆形线圈 金属外壳 Circular coil, metal casing
217 BYC07-13 ϕ13 孔

BYC08 圆形线圈 金属外壳 Circular coil, metal casing
219 BYC08-10 ϕ10 孔

BYC09 方形金属外壳 Square metal casing
219 BYC09-13 ϕ13 孔

BYC10 方形线圈 塑料外壳 Square coil, plastic shell
220 BYC10-13 ϕ13 孔

BYC12 圆形线圈 金属外壳 Circular coil, metal casing
222 BYC12-13 ϕ13 孔
223 BYC12-19 ϕ19 孔

BYC14 圆形线圈，塑料外壳 Circular coil, plastic shell
225 BYC14-13 ϕ13 孔

BYC13 圆形线圈，塑料外壳 Circular coil, plastic shell
226 BYC13-10 ϕ10 孔

BYC18 圆形线圈 金属外壳 Circular coil, metal casing
226 BYC18-13 ϕ13 孔

BYC16 圆形线圈 金属外壳 Circular coil, metal casing
227 BYC16-23 ϕ23 孔

比例阀用线圈 Coil for proportional valve

BYG05 圆形线圈 金属外壳 Circular coil, metal casing
228 BYG05-45 ϕ23 孔

BYG06 圆形线圈 金属外壳 Circular coil, metal casing
229 BYG06-45 ϕ23 孔

直流阀用线圈 DC valve coil

BYZ03 方形线圈 塑料外壳 Square coil, plastic shell
231 BYZ03-13 ϕ13 孔
231 BYZ03-16 ϕ16 孔

BYZ04 圆形线圈，塑料外壳 Circular coil, plastic shell
232 BYZ04-25 ϕ25 孔

BYZ08 圆形带扁线圈，塑料外壳 Plastic housing, threaded connection
232 BYZ08-30 ϕ16 孔

BYZ09 圆形线圈，金属外壳 Circular coil, metal casing
233 BYZ09-15 ϕ13 孔
235 BYZ09-20 ϕ14 孔
236 BYZ09-25 ϕ23 孔
236 BYZ09-30 ϕ16 孔
237 BYZ09-50 ϕ23 孔
241 BYZ09-60 ϕ27 孔
242 BYZ09-120 ϕ31 孔

目 录 Contents

BYZ11 塑料外壳 plastic shell

245 BYC11-40 ϕ19 孔
246 BYZ11-50 ϕ23 孔
247 BYZ11-90 ϕ31 孔

BYZ12 圆形线圈，塑料外壳 Circular coil, plastic shell

248 BYZ12-40 ϕ20 孔
249 BYZ12-90 ϕ26 孔

BYZ16 圆形线圈，金属外 Circular coil, metal casing

250 BYZ16-40 ϕ19 孔
252 BYZ16-60 ϕ23 孔
253 BYZ16-90 ϕ31 孔

交流阀用线圈 AC valve coil

BYJ09 方形线圈 塑料外壳 Square coil, plastic shell

254 BYJ09-27 ϕ22 孔
254 BYJ09-54 ϕ26 孔

BYJ11 方形线圈 塑料外壳 Square coil, plastic shell

255 BYJ11-27 ϕ20 孔
256 BYJ11-54 ϕ26 孔

BYJ12 方形线圈 塑料外壳 Square coil, plastic shell

257 BYJ12-27 ϕ20 孔
258 BYJ12-54 ϕ26 孔

汽车线圈 Automobile coil

BYQ01 汽车线圈 Automobile coil

259 BYQ01-32 ϕ14 孔
260 BYQ01-36 ϕ10 孔

BYQ02 汽车线圈 Automobile coil

260 BYQ02-24 ϕ10 孔

BYQ03 汽车线圈 Automobile coil

261 BYQ03-28 ϕ10 孔

BYQ04 汽车线圈 Automobile coil

263 BYQ04-28 ϕ10 孔

BYQ05 汽车线圈 Automobile coil

264 BYQ05-29 ϕ16 孔
264 BYQ05-30 ϕ16 孔

BYQ10 汽车线圈 Automobile coil

265 BYQ10-32 ϕ17 孔

目 录 Contents

267 **BYT 螺纹插装阀用导磁套** Magnetic guide sleeve for threaded cartridge valve

BYT01 拉式 六角 不锈钢隔磁 Pull-type hexagonal stainless steel magnetic separator

269 BYT01-10 ϕ10 外径
269 BYT01-13 ϕ13 外径
271 BYT01-16 ϕ16 外径
273 BYT01-S13 ϕ13 外径 双向
273 BYT01-S16 ϕ16 外径 双向

BYT02 推式 六角 不锈钢隔磁 Push type hexagonal stainless steel magnetic isolator

274 BYT02-13 ϕ13 外径
276 BYT02-16 ϕ16 外径

BYT03 拉式 六角 不锈钢隔磁 Pull-type hexagonal stainless steel magnetic separator

277 BYT03-13 ϕ13 外径

BYT04 推式 六角 不锈钢 Push type hexagonal stainless steel

277 BYT04-13 ϕ13 外径

BYT05 拉式 不锈钢隔磁 Pull type stainless steel magnetic isolation

278 BYT05-13 ϕ13 外径

BYT06 推式 不锈钢隔磁 Push type stainless steel magnetic isolation

279 BYT06-13 ϕ13 外径

BYT07 拉式 法兰 不锈钢隔磁 Pull-type flange, stainless steel magnetic isolation

280 BYT07-14 ϕ14 外径

BYT09 推式 六角 不锈钢隔磁 Push type hexagonal stainless steel magnetic isolation

281 BYT09-16 ϕ16 外径

BYT10 双向 不锈钢隔磁 Bidirectional stainless steel magnetic isolation

282 BYT10-S13 ϕ13 外径
282 BYT10-S16 ϕ16 外径

BYT11 拉式 六角 铜隔磁 Pull-type hexagonal copper magnetic separator

283 BYT11-13 ϕ13 外径
285 BYT11-16 ϕ16 外径

BYT12 推式 六角 铜隔磁 Push-type hexagonal copper magnetic separator

286 BYT12-13 ϕ13 外径
286 BYT12-14 ϕ14 外径
287 BYT12-16 ϕ16 外径

BYT13 拉式 六角 铜隔磁 Pull-type hexagonal copper magnetic separator

288 BYT13-13 ϕ13 外径

BYT14 推式 六角 铜隔磁 Push type hexagonal copper Magnetic isolator

288 BYT14-13 ϕ13 外径

目 录 Contents

BYT15 拉式 法兰 铜隔磁
Pull-type flange, copper magnetic separator

289 BYT15-16 ϕ16 外径

BYT16 推式 铜隔磁
Push-type copper magnetic shield

289 BYT16-13 ϕ13 外径

290 BYT16-16 ϕ16 外径

BYT17 推式 六角 铜隔磁
Push type hexagonal copper magnetic separator

291 BYT17-16 ϕ16 外径

BYT18 推式 法兰 铜隔磁
Push-on flanged copper magnetic isolator

291 BYT18-16 ϕ16 外径

292 BYT18-19 ϕ19 外径

BYT19 推式 铜隔磁
Push-type copper magnetic shield

293 BYT19-23 ϕ23 外径

BYT20 推式 铜隔磁
Push-type copper magnetic shield

294 BYT20-18 ϕ18 外径

BYT23 推式 铜隔磁
Push-type copper magnetic shield

295 BYT23-13 ϕ13 外径

BYT24 推式 法兰 不锈钢隔磁
Push-on flange, stainless steel, magnetic isolation

295 BYT24-16 ϕ16 外径

BYT25 拉式 铜隔磁
Laminated copper magnetic shield

296 BYT25-13 ϕ13 外径

BYT26 拉式 铜隔磁
Laminated copper magnetic shield

296 BYT26-13 ϕ13 外径

BYT27 推式 六角 不锈钢隔磁
Push type hexagonal stainless steel Magnetic isolation

297 BYT27-13 ϕ13 外径

297 BYT27-16 ϕ16 外径

BYT28 推式 铜隔磁
Push-type copper magnetic shield

298 BYT28-19 ϕ19 外径

BYT29 推式 不锈钢隔磁
Push type Stainless steel magnetic isolation

299 BYT29-13 ϕ13 外径

BYT30 推式 铜隔磁
Push-type copper magnetic shield

300 BYT30-16 ϕ16 外径

BYT31 推式 铜隔磁
Push-type copper magnetic shield

301 BYT31-13 ϕ13 外径

BYT32 推式 六角 气隙隔磁
Push type hexagonal air gap magnetic isolation

301 BYT32-13 ϕ13 外径

BYT33 拉式 法兰 不锈钢隔磁
Pull-type flange, stainless steel, magnetic isolation

302 BYT33-16 ϕ16 外径

目 录 Contents

303 **BYS 特殊产品**
special product

BYS01 双向控制 螺钉连接
Bidirectional control Screw connection

305 BYS01-45 ϕ45 外径

BYS02 电磁阀锁
solenoid valve lock

306 BYS02-25 25 对边

BYS03 方形 螺钉连接
Square Screw Connection

309 BYS03-36 36 对边

BYS04 双向控制 螺纹连接
Bidirectional control, threaded connection

310 BYS04-47 ϕ47 外径

BYS05 双向控制 螺纹连接
Bidirectional control, threaded connection

311 BYS05-45 ϕ45 外径

BYS07 双向控制 隔爆型
Bidirectional control, flameproof type

312 BYS07-40 40 宽

BYS08 多路阀用电磁铁
Electromagnet for multi-way valve

313 BYS08-31 ϕ32 外径

BYS09 多路阀用电磁铁
Electromagnet for multi-way valve

314 BYS09-25 25 宽

BYS10 计量泵用电磁铁
Electromagnet for metering pump

315 BYS10-62 ϕ62 外径

316 BYS10-73 ϕ73 外径

BYS11 多路阀用电磁铁
Electromagnet for multi-way valve

317 BYS11-38 ϕ38 外径

BYS12 多路阀用电磁铁
Electromagnet for multi-way valve

319 BYS12-35 ϕ35 外径

BYS15 微型电磁铁
Miniature Electromagnet

320 BYS15-12 ϕ15 外径

BYS16 高速开关阀用电磁铁
Electromagnet for high-speed switching valve

321 BYS16-30 ϕ30 外径

搏业电磁铁 编号规则
Boye Solenoid Numbering rules

BY □ 00 —00 —00 □ □ 00VDC 00W 备注

搏业液压

产品类别
- Z 直流电磁铁
- J 交流电磁铁
- G 比例电磁铁
- M 插装电磁铁
- C 插装线圈
- T 插装导磁套
- Q 汽车线圈
- S 特殊产品
- L 连接器
- W 传感器
- D 代工零件

产品系列
01、02、03...

产品特征
- 内孔尺寸
- 外形尺寸
- 电磁力特性
- 定制特征
- ...

设计序号
01、02、03...

导磁套手动装置
M 带手动杆式
R 带调节杆式

线圈电气连接方式
A D G ...
详见电气连接形式说明

线圈额定电压
24VDC 直流
220VAC 交流
详见电源形式说明

线圈额定功率

定制产品特殊要求

产品选型指南 Product Selection Guide

搏业线圈 供电电源形式说明
Boye coil Explanation of Power Supply Form

代号 Code	电源形式 Power form	电气原理图 Electrical schematic diagram
DC	直流输入 DC input	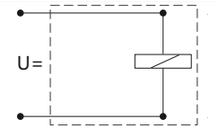
DC/S	内置双向二级管 Built-in bidirectional diode	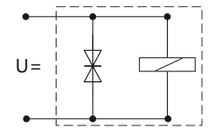
DC/D	内置单向二级管 Built-in unidirectional diode	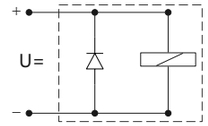
AC	交流输入 AC input	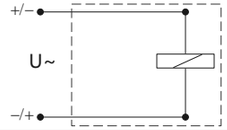
BC	内置半波整流装置 Built in half wave rectifier circuit	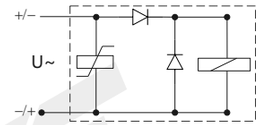
RC	内置全波整流装置 Built in full wave rectifier circuit	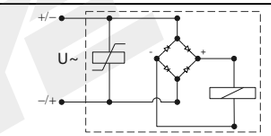
RAC	外置半波整流输入 External half-wave rectified input	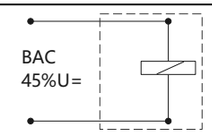
BAC	外置全波整流输入 External half-wave rectified input	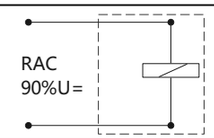

搏业线圈可定制带**节能型芯片**线圈，长期通电工况下，可有效降低功耗 60% 以上，详情请咨询搏业液压工程师。

搏业线圈 电气连接形式及防护等级

Boye coil Electrical connection form and protection level

产品选型指南 Product Selection Guide

搏业线圈

支持多种连接方式设计，满足不同领域应用需求，支持定制开发。
Support multiple connection design methods to meet different application needs in various fields, and support customized development.

代号 Code name	名称 name	连接器型号 Connector model	防护等级 Protection level
A	双圆柱 （接线盒式）	double-cylinder (Special connector for wirebox)	IP65
D	双圆插针 （德驰型）	Deutsch DT04-2P	IP69K
G	三插片	DIN 43650/ISO 4400(2P+E)	IP65
H	电缆式	ϕ5.5-0.75mm^2×2	IP67-IP69K
J	双插片 （安普型）	AMP Junior Timer	IP67-IP69K
K	双圆柱 螺纹式	Kostal-M24/M27	IP65
L	引线式	Double lead	IP67-IP69K
L+*	引线连接器组合	Dual leads+connector	IP65-IP69K
P	安普型	AMP superseal 1.5	IP67
M	双扁插针 （德尔福型）	Delphi_Metri-Pack 150.2	IP69K
S	双插片	Dual spade	IP65
Y	双扁插针	Delphi_Metri_Pack_150	IP69K
Q	汽车应用类	Automotive application category	IP65-IP69K
T	特殊定制类	Special customization category	IP65-IP69K

BYZ 直流湿式阀用电磁铁

DC SOLENOIDS FOR HYDRAULICS VALVES

- 搏业液压，BYZ 直流湿式阀用电磁铁，作为液压电磁阀关键电磁驱动元件，广泛应用于工业、工程、农业、医疗、机械等领域自动化控制系统中。
- 技术标准严格按照 JBT5244/VDE0580 设计生产。
- 采用优质导磁材料，输出力大保证电磁阀工作稳定可靠。
- 提供多种标准连接方式，外壳防护等级 IP65-IP69K，可满足不同领域环境需要。
- 采用高质量 H 级漆包线和绝缘材料，全塑封线圈结构，坚固耐用，散热快，即使长期使用也不会烧损。
- 导磁套额定工作压力≤ 21MPa，极限压力≥ 31.5MPa，爆破压力≥ 63MPa。
- 机械寿命＞ 1000 万次，脉冲疲劳寿命＞ 200 万次
- 表面处理：蓝白锌 / 锌镍合金
- 标准产品若不能满足您的需求时，可联系我公司，若有其他特殊要求可定制，欢迎咨询。

- Boye hydraulic, BYZ DC wet valve electromagnet, as the key electromagnetic driving element of hydraulic solenoid valve, is widely used in automatic control system.
- The technical standard is designed and produced in strict accordance with JBT5244/VDE0580.
- It adopts high-quality magnetic conducting material with large output force to ensure the stable and reliable operation of the solenoid valve.
- A variety of standard connection modes are provided, and the enclosure protection grade is IP65-IP69K, which can meet the environmental needs of different fields.
- It adopts high-quality H-class enamelled wire and insulating material, and fully plastic sealed coil structure, which is firm and durable, fast heat dissipation, and will not burn even if it is used for a long time.
- Rated working pressure of magnetic guide sleeve ≤ 21MPa, limit pressure ≥ 31.5Mpa, burst pressure ≥ 63Mpa.
- Mechanical life > 10 million times, pulse fatigue life > 2 million times
- Surface treatment: blue white zinc/zinc-nickel alloy
- If the standard products can not meet your needs, you can contact our company. If there are other special requirements, you can customize them. Welcome to consult.

BYZ09-15-01D

直流湿式阀用电磁铁
DC solenoids for hydraulics valves

DC 12V
DC 24V

其它规格可定做
Other can be customized

- 适用于 3 通径液压电磁换向阀
- 螺纹连接，线圈可实现免停机更换
- 配备手动应急装置
- 线圈内孔 ϕ13

- Applicable to 3-way hydraulic solenoid directional valve
- With threaded connection, the coil can be replaced without shutdown
- Equipped with manual emergency device
- Coil inner hole ϕ13

外形及连接尺寸
Outline and connection dimensions

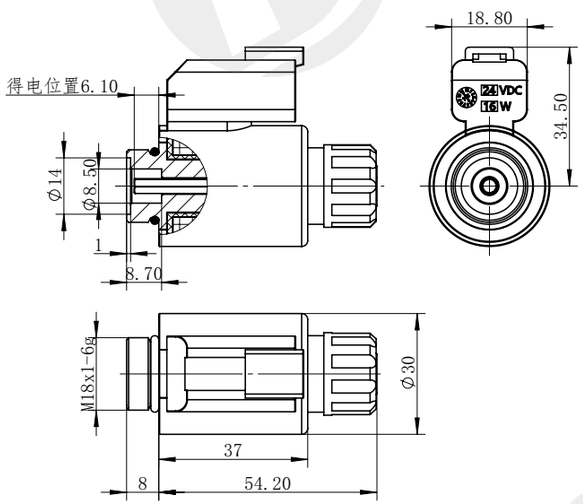

技术参数 /technical parameter		
环境温度 Ambient temperature	℃	-25~50
电压波动范围 Voltage fluctuation range	%	85~110
额定功率 Rated power	W	30
额定行程 Rated stroke	mm	2
全行程 Full stroke	mm	⩾ 4.5
工作油压 Working oil pressure	Mpa	⩽ 21
防护等级 Degree of protection		IP67
操作频率 Operating frequency	T/h	12000
通电持续率 Power on duration	%	100
绝缘等级 Insulation class		H(180)
电气连接方式 Electrical connection mode		DT04-2P

注意事项
matters needing attention

1. 线圈不得单独通电使用，有烧损风险！
2. 非防爆线圈，不得使用在有爆炸危险的介质中！
3. 线圈安装后，必须接地可靠，否则有触电危险！

1. The coil shall not be powered on alone, which has the risk of burning!
2. Non explosion-proof coil shall not be used in medium with explosion risk!
3. After the coil is installed, it must be grounded reliably, otherwise there is a risk of electric shock！

力 - 位移特性曲线
F-S characteristic curve

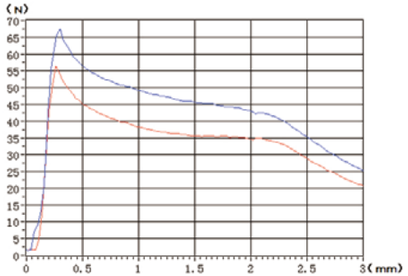

样本数据来源于试验室环境，仅供参考，贵公司如需最新数据或有特殊需求，欢迎联系博业液压工程师。
The sample data comes from the laboratory environment and is only for reference. If your company needs the latest data or has special needs, please contact Boye hydraulic engineer.

BYZ09-15-01G

直流湿式阀用电磁铁
DC solenoids for hydraulics valves

DC 24V
AC 220V

其它规格可定做
Other can be customized

- 适用于 3 通径液压电磁换向阀
- 螺纹连接，线圈可实现免停机更换
- 配备手动应急装置
- 线圈内孔 ϕ13

- Applicable to 3-way hydraulic solenoid directional valve
- With threaded connection, the coil can be replaced without shutdown
- Equipped with manual emergency device
- Coil inner hole ϕ13

外形及连接尺寸
Outline and connection dimensions

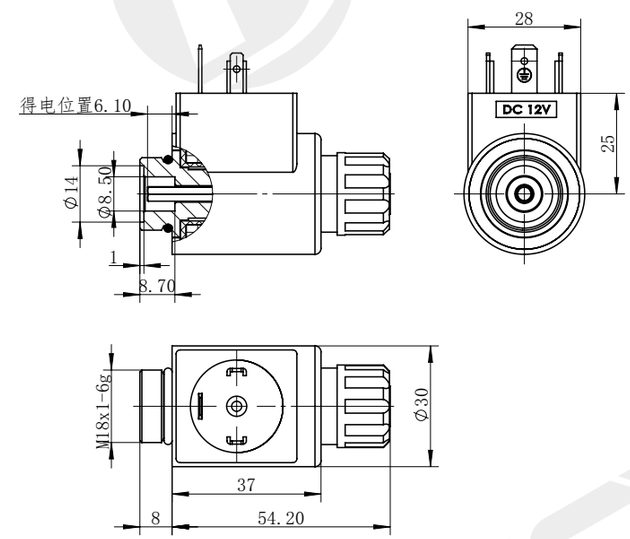

技术参数 /technical parameter		
环境温度 Ambient temperature	℃	-10~50
电压波动范围 Voltage fluctuation range	%	85~110
额定功率 Rated power	W	30
额定行程 Rated stroke	mm	2
全行程 Full stroke	mm	⩾ 4.5
工作油压 Working oil pressure	Mpa	⩽ 21
防护等级 Degree of protection		IP65
操作频率 Operating frequency	T/h	12000
通电持续率 Power on duration	%	100
绝缘等级 Insulation class		H(180)
电气连接方式 Electrical connection mode		DIN43650

注意事项
matters needing attention

1. 线圈不得单独通电使用，有烧损风险！
2. 非防爆线圈，不得使用在有爆炸危险的介质中！
3. 线圈安装后，必须接地可靠，否则有触电危险！

1. The coil shall not be powered on alone, which has the risk of burning!
2. Non explosion-proof coil shall not be used in medium with explosion risk!
3. After the coil is installed, it must be grounded reliably, otherwise there is a risk of electric shock！

力 - 位移特性曲线
F-S characteristic curve

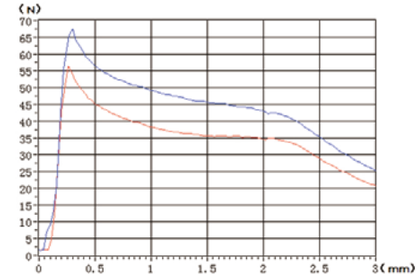

样本数据来源于试验室环境，仅供参考，贵公司如需最新数据或有特殊需求，欢迎联系博业液压工程师。
The sample data comes from the laboratory environment and is only for reference. If your company needs the latest data or has special needs, please contact Boye hydraulic engineer.

BYZ09-15-04D

直流湿式阀用电磁铁
DC solenoids for hydraulics valves

DC 12V
DC 24V

其它规格可定做
Other can be customized

- 适用于 3 通径液压电磁换向阀
- 螺纹连接，线圈可实现免停机更换
- 线圈内孔 ϕ13

- Applicable to 3-way hydraulic solenoid directional valve
- With threaded connection, the coil can be replaced without shutdown
- Coil inner hole ϕ13

外形及连接尺寸
Outline and connection dimensions

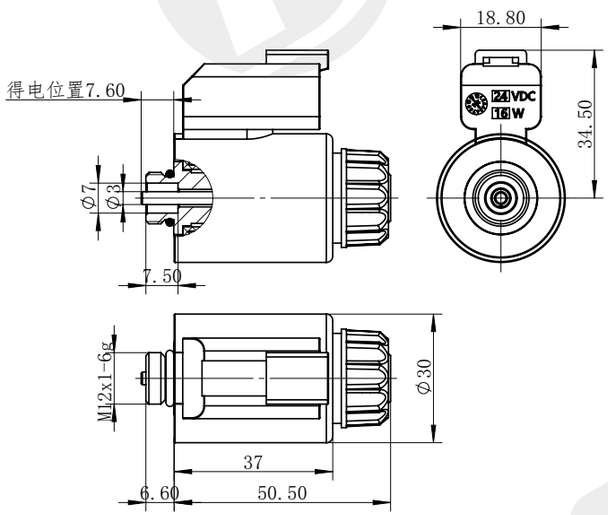

技术参数 /technical parameter		
环境温度 Ambient temperature	℃	-25~50
电压波动范围 Voltage fluctuation range	%	85~110
额定功率 Rated power	W	16
额定行程 Rated stroke	mm	1.8
全行程 Full stroke	mm	⩾ 2.3
工作油压 Working oil pressure	Mpa	⩽ 16
防护等级 Degree of protection		IP67
操作频率 Operating frequency	T/h	12000
通电持续率 Power on duration	%	100
绝缘等级 Insulation class		H(180)
电气连接方式 Electrical connection mode		DT04-2P

注意事项
matters needing attention

1. 线圈不得单独通电使用，有烧损风险！
2. 非防爆线圈，不得使用在有爆炸危险的介质中！
3. 线圈安装后，必须接地可靠，否则有触电危险！

1. The coil shall not be powered on alone, which has the risk of burning!
2. Non explosion-proof coil shall not be used in medium with explosion risk!
3. After the coil is installed, it must be grounded reliably, otherwise there is a risk of electric shock！

力 - 位移特性曲线
F-S characteristic curve

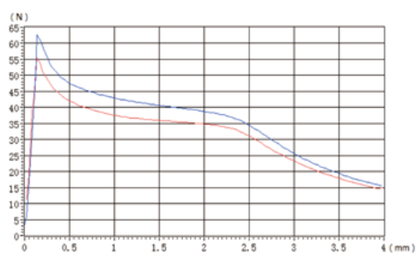

样本数据来源于试验室环境，仅供参考，贵公司如需最新数据或有特殊需求，欢迎联系搏业液压工程师。
The sample data comes from the laboratory environment and is only for reference. If your company needs the latest data or has special needs, please contact Boye hydraulic engineer.

BYZ09-15-04MD

直流湿式阀用电磁铁
DC solenoids for hydraulics valves

DC 12V
DC 24V

其它规格可定做
Other can be customized

- 适用于 3 通径液压电磁换向阀
- 螺纹连接，线圈可实现免停机更换
- 配备手动应急装置
- 线圈内孔 ϕ13

- Applicable to 3-way hydraulic solenoid directional valve
- With threaded connection, the coil can be replaced without shutdown
- Equipped with manual emergency device
- Coil inner hole ϕ13

外形及连接尺寸
Outline and connection dimensions

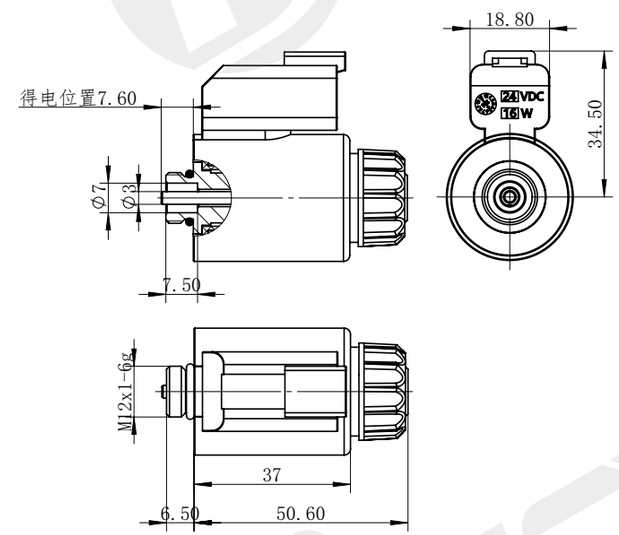

技术参数 /technical parameter		
环境温度 Ambient temperature	℃	-25~50
电压波动范围 Voltage fluctuation range	%	85~110
额定功率 Rated power	W	16
额定行程 Rated stroke	mm	1.8
全行程 Full stroke	mm	⩾ 2.3
工作油压 Working oil pressure	Mpa	⩽ 16
防护等级 Degree of protection		IP67
操作频率 Operating frequency	T/h	12000
通电持续率 Power on duration	%	100
绝缘等级 Insulation class		H(180)
电气连接方式 Electrical connection mode		DT04-2P

注意事项
matters needing attention

1. 线圈不得单独通电使用，有烧损风险！
2. 非防爆线圈，不得使用在有爆炸危险的介质中！
3. 线圈安装后，必须接地可靠，否则有触电危险！

1. The coil shall not be powered on alone, which has the risk of burning!
2. Non explosion-proof coil shall not be used in medium with explosion risk!
3. After the coil is installed, it must be grounded reliably, otherwise there is a risk of electric shock！

力 - 位移特性曲线
F-S characteristic curve

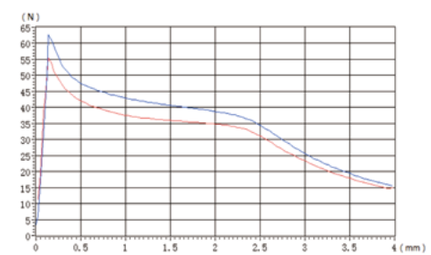

样本数据来源于试验室环境，仅供参考，贵公司如需最新数据或有特殊需求，欢迎联系搏业液压工程师。
The sample data comes from the laboratory environment and is only for reference. If your company needs the latest data or has special needs, please contact Boye hydraulic engineer.

BYZ09-20-01G

直流湿式阀用电磁铁

DC solenoids for hydraulics valves

DC 24V
AC 220V

其它规格可定做
Other can be customized

- 适用于 4 通径液压电磁换向阀
- 螺纹连接，线圈可实现免停机更换
- 配备手动应急装置
- 线圈内孔 ϕ14

- Applicable to 4-way hydraulic solenoid directional valve
- With threaded connection, the coil can be replaced without shutdown
- Equipped with manual emergency device
- Coil inner hole ϕ14

外形及连接尺寸

Outline and connection dimensions

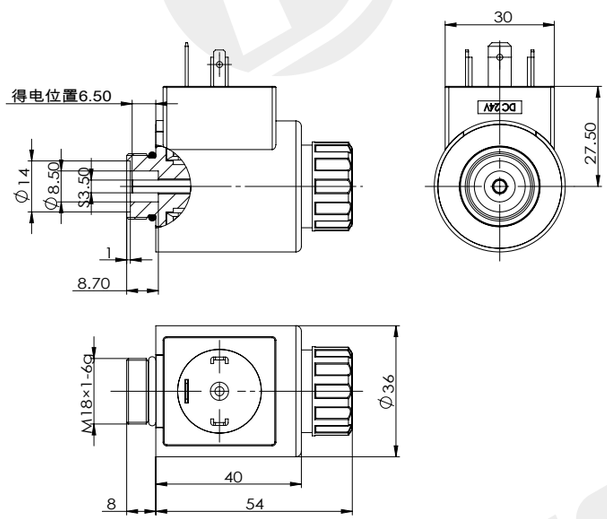

技术参数 /technical parameter		
环境温度 Ambient temperature	℃	-10~40
电压波动范围 Voltage fluctuation range	%	85~110
额定功率 Rated power	W	25
额定行程 Rated stroke	mm	2
全行程 Full stroke	mm	⩾ 4.5
工作油压 Working oil pressure	Mpa	⩽ 21
防护等级 Degree of protection		IP65
操作频率 Operating frequency	T/h	12000
通电持续率 Power on duration	%	100
绝缘等级 Insulation class		H(180)
电气连接方式 Electrical connection mode		DIN43650

注意事项

matters needing attention

1. 线圈不得单独通电使用，有烧损风险！
2. 非防爆线圈，不得使用在有爆炸危险的介质中！
3. 线圈安装后，必须接地可靠，否则有触电危险！

1. The coil shall not be powered on alone, which has the risk of burning!
2. Non explosion-proof coil shall not be used in medium with explosion risk!
3. After the coil is installed, it must be grounded reliably, otherwise there is a risk of electric shock！

力 - 位移特性曲线

F-S characteristic curve

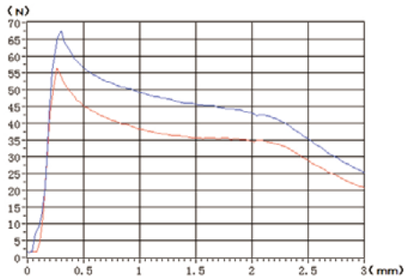

样本数据来源于试验室环境，仅供参考，贵公司如需最新数据或有特殊需求，欢迎联系搏业液压工程师。
The sample data comes from the laboratory environment and is only for reference. If your company needs the latest data or has special needs, please contact Boye hydraulic engineer.

BYZ09-20-01L

直流湿式阀用电磁铁

DC solenoids for hydraulics valves

DC 24V
AC 220V

其它规格可定做
Other can be customized

- 适用于 4 通径液压电磁换向阀
- 螺纹连接，线圈可实现免停机更换
- 配备手动应急装置
- 线圈内孔 ϕ14

- Applicable to 4-way hydraulic solenoid directional valve
- With threaded connection, the coil can be replaced without shutdown
- Equipped with manual emergency device
- Coil inner hole ϕ14

外形及连接尺寸

Outline and connection dimensions

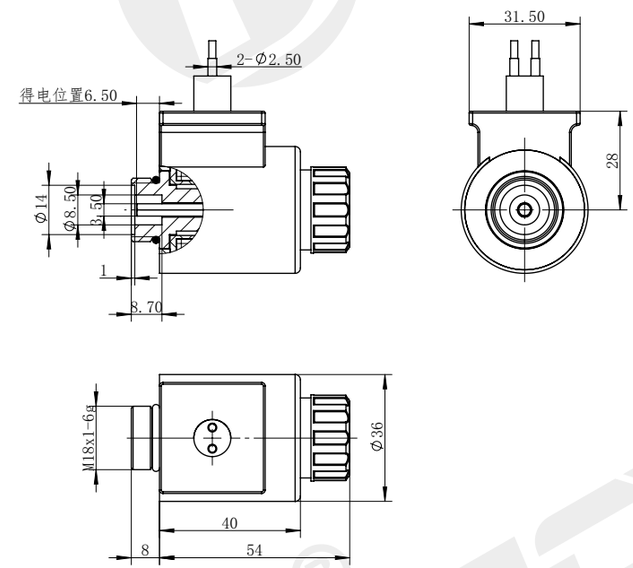

技术参数 /technical parameter		
环境温度 Ambient temperature	℃	-10~40
电压波动范围 Voltage fluctuation range	%	85~110
额定功率 Rated power	W	25
额定行程 Rated stroke	mm	2
全行程 Full stroke	mm	⩾ 4.5
工作油压 Working oil pressure	Mpa	⩽ 21
防护等级 Degree of protection		IP67
操作频率 Operating frequency	T/h	12000
通电持续率 Power on duration	%	100
绝缘等级 Insulation class		H(180)
电气连接方式 Electrical connection mode		双引线

注意事项

matters needing attention

1. 线圈不得单独通电使用，有烧损风险！
2. 非防爆线圈，不得使用在有爆炸危险的介质中！
3. 线圈安装后，必须接地可靠，否则有触电危险！

1. The coil shall not be powered on alone, which has the risk of burning!
2. Non explosion-proof coil shall not be used in medium with explosion risk!
3. After the coil is installed, it must be grounded reliably, otherwise there is a risk of electric shock！

力 - 位移特性曲线

F-S characteristic curve

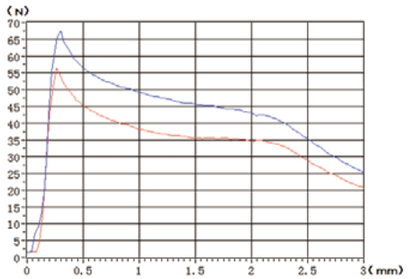

样本数据来源于试验室环境，仅供参考，贵公司如需最新数据或有特殊需求，欢迎联系搏业液压工程师。
The sample data comes from the laboratory environment and is only for reference. If your company needs the latest data or has special needs, please contact Boye hydraulic engineer.

BYZ09-25-01G

直流湿式阀用电磁铁

DC solenoids for hydraulics valves

DC 24V
AC 220V

其它规格可定做
Other can be customized

- 适用于 6 通径液压电磁换向阀
- 螺纹连接，线圈可实现免停机更换
- 配备手动应急装置
- 线圈内孔 ϕ23

- Applicable to 6-way hydraulic solenoid directional valve
- With threaded connection, the coil can be replaced without shutdown
- Equipped with manual emergency device
- Coil inner hole ϕ23

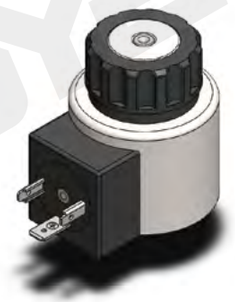

外形及连接尺寸

Outline and connection dimensions

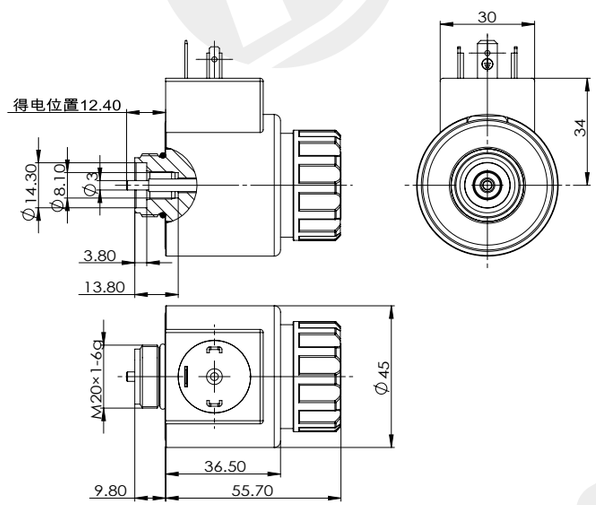

技术参数 /technical parameter		
环境温度 Ambient temperature	℃	-10~40
电压波动范围 Voltage fluctuation range	%	85~110
额定功率 Rated power	W	25
额定行程 Rated stroke	mm	2.8
全行程 Full stroke	mm	⩾ 6.5
工作油压 Working oil pressure	Mpa	⩽ 21
防护等级 Degree of protection		IP65
操作频率 Operating frequency	T/h	12000
通电持续率 Power on duration	%	100
绝缘等级 Insulation class		H(180)
电气连接方式 Electrical connection mode		DIN43650

注意事项

matters needing attention

1. 线圈不得单独通电使用，有烧损风险！
2. 非防爆线圈，不得使用在有爆炸危险的介质中！
3. 线圈安装后，必须接地可靠，否则有触电危险！

1. The coil shall not be powered on alone, which has the risk of burning!
2. Non explosion-proof coil shall not be used in medium with explosion risk!
3. After the coil is installed, it must be grounded reliably, otherwise there is a risk of electric shock！

力 - 位移特性曲线

F-S characteristic curve

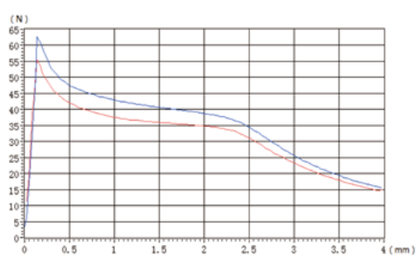

样本数据来源于试验室环境，仅供参考，贵公司如需最新数据或有特殊需求，欢迎联系搏业液压工程师。
The sample data comes from the laboratory environment and is only for reference. If your company needs the latest data or has special needs, please contact Boye hydraulic engineer.

BYZ09-30-01G

直流湿式阀用电磁铁

DC solenoids for hydraulics valves

DC 24V
AC 220V

其它规格可定做
Other can be customized

- 适用于 5 通径液压电磁换向阀
- 螺纹连接，线圈可实现免停机更换
- 配备手动应急装置
- 线圈内孔 ϕ16

- Applicable to 5-way hydraulic solenoid directional valve
- With threaded connection, the coil can be replaced without shutdown
- Equipped with manual emergency device
- Coil inner hole ϕ16

外形及连接尺寸

Outline and connection dimensions

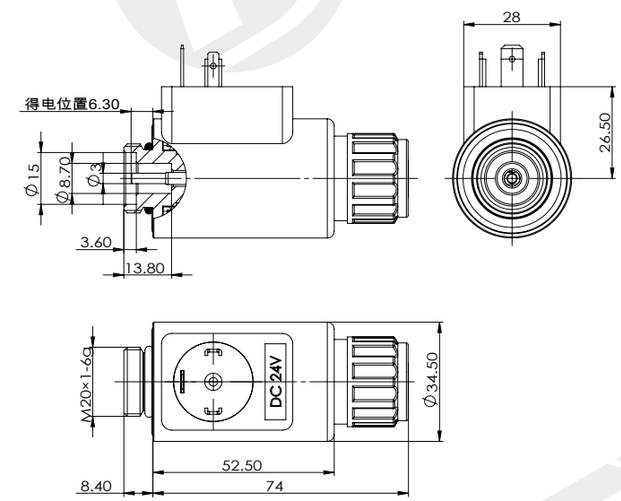

技术参数 /technical parameter		
环境温度 Ambient temperature	℃	-10~40
电压波动范围 Voltage fluctuation range	%	85~110
额定功率 Rated power	W	25
额定行程 Rated stroke	mm	2.8
全行程 Full stroke	mm	⩾ 6.5
工作油压 Working oil pressure	Mpa	⩽ 21
防护等级 Degree of protection		IP65
操作频率 Operating frequency	T/h	12000
通电持续率 Power on duration	%	100
绝缘等级 Insulation class		H(180)
电气连接方式 Electrical connection mode		DIN43650

注意事项

matters needing attention

1. 线圈不得单独通电使用，有烧损风险！
2. 非防爆线圈，不得使用在有爆炸危险的介质中！
3. 线圈安装后，必须接地可靠，否则有触电危险！

1. The coil shall not be powered on alone, which has the risk of burning!
2. Non explosion-proof coil shall not be used in medium with explosion risk!
3. After the coil is installed, it must be grounded reliably, otherwise there is a risk of electric shock！

力 - 位移特性曲线

F-S characteristic curve

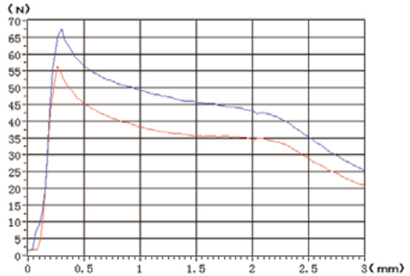

样本数据来源于试验室环境，仅供参考，贵公司如需最新数据或有特殊需求，欢迎联系搏业液压工程师。
The sample data comes from the laboratory environment and is only for reference. If your company needs the latest data or has special needs, please contact Boye hydraulic engineer.

BYZ09-50-01G

直流湿式阀用电磁铁

DC solenoids for hydraulics valves

DC 24V
AC 220V

其它规格可定做
Other can be customized

- 适用于 6 通径液压电磁换向阀
- 螺纹连接，线圈可实现免停机更换
- 配备手动应急装置
- 线圈内孔 ϕ23

- Applicable to 6-way hydraulic solenoid directional valve
- With threaded connection, the coil can be replaced without shutdown
- Equipped with manual emergency device
- Coil inner hole ϕ23

外形及连接尺寸

Outline and connection dimensions

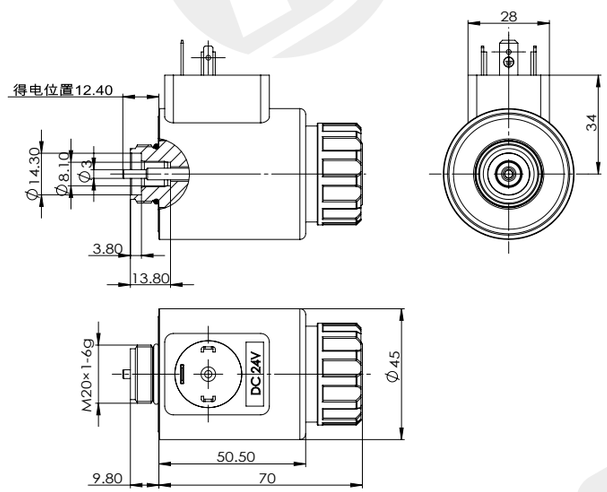

技术参数 /technical parameter		
环境温度 Ambient temperature	℃	-10~40
电压波动范围 Voltage fluctuation range	%	85~110
额定功率 Rated power	W	30
额定行程 Rated stroke	mm	2.8
全行程 Full stroke	mm	⩾ 6.5
工作油压 Working oil pressure	Mpa	⩽ 21
防护等级 Degree of protection		IP65
操作频率 Operating frequency	T/h	12000
通电持续率 Power on duration	%	100
绝缘等级 Insulation class		H(180)
电气连接方式 Electrical connection mode		DIN43650

注意事项

matters needing attention

1. 线圈不得单独通电使用，有烧损风险！
2. 非防爆线圈，不得使用在有爆炸危险的介质中！
3. 线圈安装后，必须接地可靠，否则有触电危险！

1. The coil shall not be powered on alone, which has the risk of burning!
2. Non explosion-proof coil shall not be used in medium with explosion risk!
3. After the coil is installed, it must be grounded reliably, otherwise there is a risk of electric shock！

力 - 位移特性曲线

F-S characteristic curve

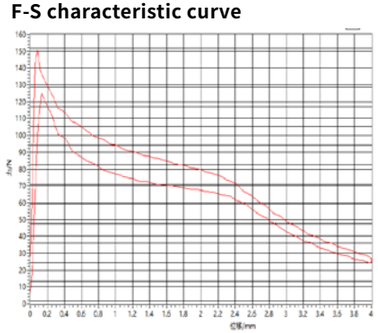

样本数据来源于试验室环境，仅供参考，贵公司如需最新数据或有特殊需求，欢迎联系搏业液压工程师。
The sample data comes from the laboratory environment and is only for reference. If your company needs the latest data or has special needs, please contact Boye hydraulic engineer.

BYZ09-50-01A

直流湿式阀用电磁铁

DC solenoids for hydraulics valves

DC 24V
AC 220V

其它规格可定做
Other can be customized

- 适用于 6 通径液压电磁换向阀
- 螺纹连接，线圈可实现免停机更换
- 配备手动应急装置
- 线圈内孔 ϕ23

- Applicable to 6-way hydraulic solenoid directional valve
- With threaded connection, the coil can be replaced without shutdown
- Equipped with manual emergency device
- Coil inner hole ϕ23

外形及连接尺寸

Outline and connection dimensions

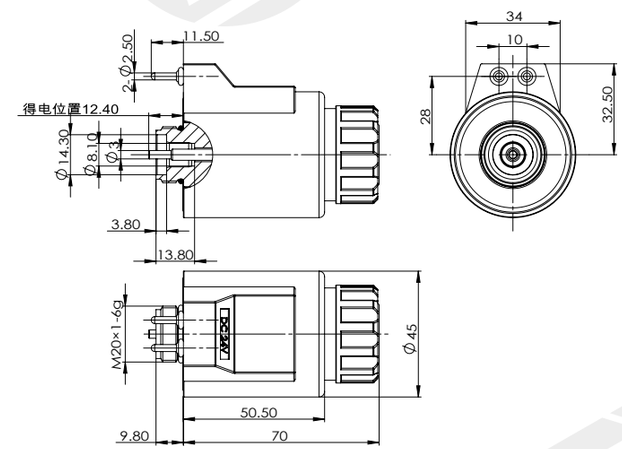

技术参数 /technical parameter		
环境温度 Ambient temperature	℃	-10~40
电压波动范围 Voltage fluctuation range	%	85~110
额定功率 Rated power	W	30
额定行程 Rated stroke	mm	2.8
全行程 Full stroke	mm	⩾ 6.5
工作油压 Working oil pressure	Mpa	⩽ 21
防护等级 Degree of protection		IP65
操作频率 Operating frequency	T/h	12000
通电持续率 Power on duration	%	100
绝缘等级 Insulation class		H(180)
电气连接方式 Electrical connection mode		接线盒式

注意事项

matters needing attention

1. 线圈不得单独通电使用，有烧损风险！
2. 非防爆线圈，不得使用在有爆炸危险的介质中！
3. 线圈安装后，必须接地可靠，否则有触电危险！

1. The coil shall not be powered on alone, which has the risk of burning!
2. Non explosion-proof coil shall not be used in medium with explosion risk!
3. After the coil is installed, it must be grounded reliably, otherwise there is a risk of electric shock！

力 - 位移特性曲线

F-S characteristic curve

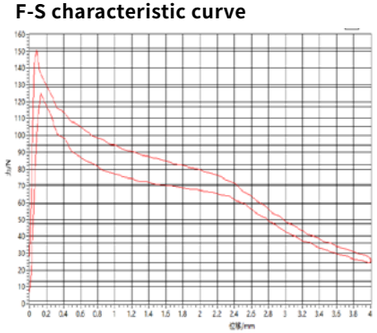

样本数据来源于试验室环境，仅供参考，贵公司如需最新数据或有特殊需求，欢迎联系搏业液压工程师。
The sample data comes from the laboratory environment and is only for reference. If your company needs the latest data or has special needs, please contact Boye hydraulic engineer.

BYZ09-50B-01D

直流湿式阀用电磁铁
DC solenoids for hydraulics valves

DC 12V
DC 24V

其它规格可定做
Other can be customized

- 适用于 6 通径液压电磁换向阀
- 螺纹连接，线圈可实现免停机更换
- 配备手动应急装置
- 线圈内孔 ϕ23, 全塑封工艺

- Applicable to 6-way hydraulic solenoid directional valve
- With threaded connection, the coil can be replaced without shutdown
- Equipped with manual emergency device
- Coil inner hole ϕ23,Full plastic sealing process

外形及连接尺寸
Outline and connection dimensions

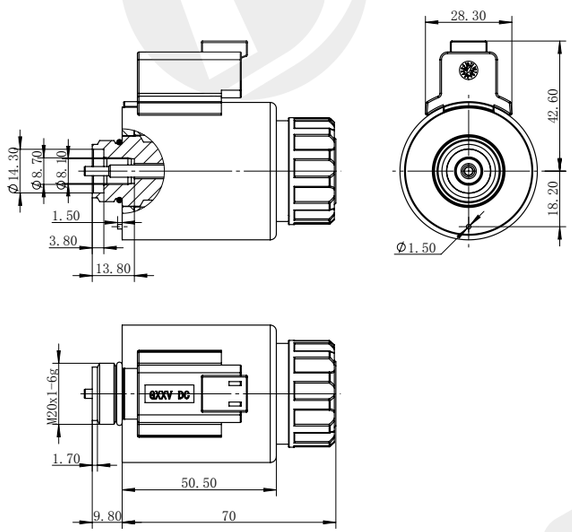

技术参数 /technical parameter		
环境温度 Ambient temperature	℃	-25~50
电压波动范围 Voltage fluctuation range	%	85~110
额定功率 Rated power	W	30
额定行程 Rated stroke	mm	2.8
全行程 Full stroke	mm	⩾ 6.1
工作油压 Working oil pressure	Mpa	⩽ 21
防护等级 Degree of protection		IP67
操作频率 Operating frequency	T/h	12000
通电持续率 Power on duration	%	100
绝缘等级 Insulation class		H(180)
电气连接方式 Electrical connection mode		DT04-2P

注意事项
matters needing attention

1. 线圈不得单独通电使用，有烧损风险！
2. 非防爆线圈，不得使用在有爆炸危险的介质中！
3. 线圈安装后，必须接地可靠，否则有触电危险！

1. The coil shall not be powered on alone, which has the risk of burning!
2. Non explosion-proof coil shall not be used in medium with explosion risk!
3. After the coil is installed, it must be grounded reliably, otherwise there is a risk of electric shock！

力 - 位移特性曲线
F-S characteristic curve

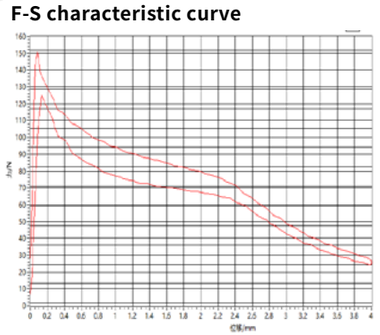

样本数据来源于试验室环境，仅供参考，贵公司如需最新数据或有特殊需求，欢迎联系搏业液压工程师。
The sample data comes from the laboratory environment and is only for reference. If your company needs the latest data or has special needs, please contact Boye hydraulic engineer.

BYZ09-50B-01G

直流湿式阀用电磁铁
DC solenoids for hydraulics valves

DC 24V
AC 220V

其它规格可定做
Other can be customized

- 适用于 6 通径液压电磁换向阀
- 螺纹连接，线圈可实现免停机更换
- 配备手动应急装置
- 线圈内孔 ϕ23, 全塑封工艺

- Applicable to 6-way hydraulic solenoid directional valve
- With threaded connection, the coil can be replaced without shutdown
- Equipped with manual emergency device
- Coil inner hole ϕ23,Full plastic sealing process

外形及连接尺寸
Outline and connection dimensions

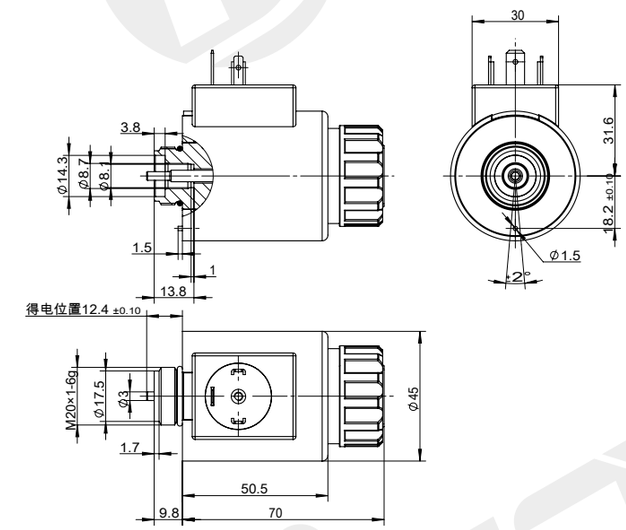

技术参数 /technical parameter		
环境温度 Ambient temperature	℃	-25~50
电压波动范围 Voltage fluctuation range	%	85~110
额定功率 Rated power	W	30
额定行程 Rated stroke	mm	2.8
全行程 Full stroke	mm	⩾ 6.1
工作油压 Working oil pressure	Mpa	⩽ 21
防护等级 Degree of protection		IP65
操作频率 Operating frequency	T/h	12000
通电持续率 Power on duration	%	100
绝缘等级 Insulation class		H(180)
电气连接方式 Electrical connection mode		DIN43650

注意事项
matters needing attention

1. 线圈不得单独通电使用，有烧损风险！
2. 非防爆线圈，不得使用在有爆炸危险的介质中！
3. 线圈安装后，必须接地可靠，否则有触电危险！

1. The coil shall not be powered on alone, which has the risk of burning!
2. Non explosion-proof coil shall not be used in medium with explosion risk!
3. After the coil is installed, it must be grounded reliably, otherwise there is a risk of electric shock！

力 - 位移特性曲线
F-S characteristic curve

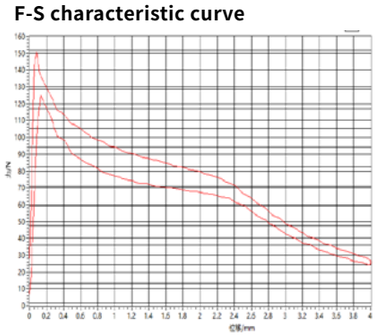

样本数据来源于试验室环境，仅供参考，贵公司如需最新数据或有特殊需求，欢迎联系搏业液压工程师。
The sample data comes from the laboratory environment and is only for reference. If your company needs the latest data or has special needs, please contact Boye hydraulic engineer.

TEL:0574-86587131 www.nbboye.net

BYZ09-50B-02D

直流湿式阀用电磁铁

DC solenoids for hydraulics valves

DC 12V
DC 24V

其它规格可定做
Other can be customized

- 适用于 6 通径液压电磁换向阀
- 螺纹连接，线圈可实现免停机更换
- 配备手动应急装置
- 线圈内孔 ϕ23，全塑封工艺

- Applicable to 6-way hydraulic solenoid directional valve
- With threaded connection, the coil can be replaced without shutdown
- Equipped with manual emergency device
- Coil inner hole ϕ 23, Full plastic sealing process

外形及连接尺寸

Outline and connection dimensions

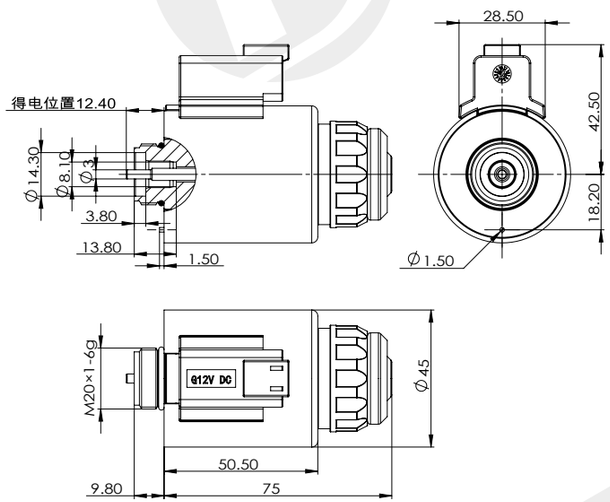

技术参数 /technical parameter		
环境温度 Ambient temperature	℃	-25~50
电压波动范围 Voltage fluctuation range	%	85~110
额定功率 Rated power	W	30
额定行程 Rated stroke	mm	2.8
全行程 Full stroke	mm	⩾ 6.1
工作油压 Working oil pressure	Mpa	⩽ 21
防护等级 Degree of protection		IP67
操作频率 Operating frequency	T/h	12000
通电持续率 Power on duration	%	100
绝缘等级 Insulation class		H(180)
电气连接方式 Electrical connection mode		DT04-2P

注意事项

matters needing attention

1. 线圈不得单独通电使用，有烧损风险！
2. 非防爆线圈，不得使用在有爆炸危险的介质中！
3. 线圈安装后，必须接地可靠，否则有触电危险！

1. The coil shall not be powered on alone, which has the risk of burning!
2. Non explosion-proof coil shall not be used in medium with explosion risk!
3. After the coil is installed, it must be grounded reliably, otherwise there is a risk of electric shock！

力 - 位移特性曲线

F-S characteristic curve

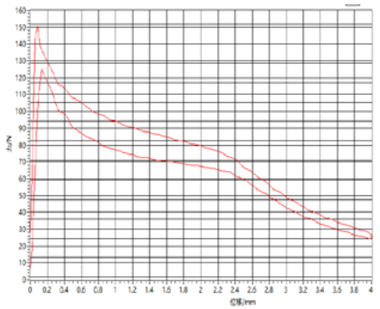

样本数据来源于试验室环境，仅供参考，贵公司如需最新数据或有特殊需求，欢迎联系搏业液压工程师。
The sample data comes from the laboratory environment and is only for reference. If your company needs the latest data or has special needs, please contact Boye hydraulic engineer.

BYZ09-50B-03G

直流湿式阀用电磁铁

DC solenoids for hydraulics valves

DC 24V
AC 220V

其它规格可定做
Other can be customized

- 适用于 6 通径液压电磁换向阀
- 螺纹连接，线圈可实现免停机更换
- 配备手动应急装置
- 线圈内孔 ϕ23, 全塑封工艺

- Applicable to 6-way hydraulic solenoid directional valve
- With threaded connection, the coil can be replaced without shutdown
- Equipped with manual emergency device
- Coil inner hole ϕ23,Full plastic sealing process

外形及连接尺寸

Outline and connection dimensions

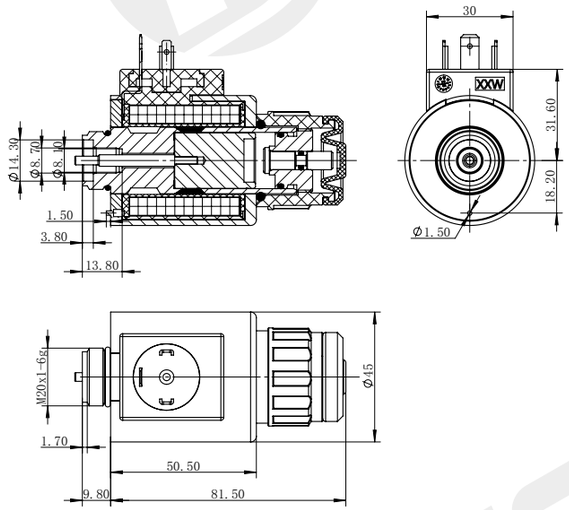

技术参数 /technical parameter		
环境温度 Ambient temperature	℃	-25~50
电压波动范围 Voltage fluctuation range	%	85~110
额定功率 Rated power	W	30
额定行程 Rated stroke	mm	2.8
全行程 Full stroke	mm	⩾ 6.1
工作油压 Working oil pressure	Mpa	⩽ 31.5
防护等级 Degree of protection		IP65
操作频率 Operating frequency	T/h	12000
通电持续率 Power on duration	%	100
绝缘等级 Insulation class		H(180)
电气连接方式 Electrical connection mode		DIN43650

注意事项

matters needing attention

1. 线圈不得单独通电使用，有烧损风险！
2. 非防爆线圈，不得使用在有爆炸危险的介质中！
3. 线圈安装后，必须接地可靠，否则有触电危险！

1. The coil shall not be powered on alone, which has the risk of burning!
2. Non explosion-proof coil shall not be used in medium with explosion risk!
3. After the coil is installed, it must be grounded reliably, otherwise there is a risk of electric shock！

力 - 位移特性曲线

F-S characteristic curve

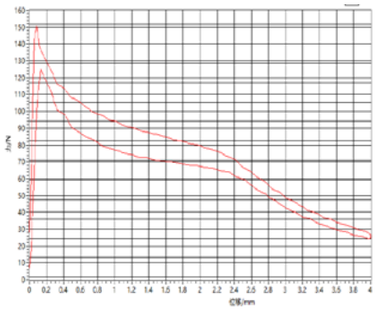

样本数据来源于试验室环境，仅供参考，贵公司如需最新数据或有特殊需求，欢迎联系搏业液压工程师。
The sample data comes from the laboratory environment and is only for reference. If your company needs the latest data or has special needs, please contact Boye hydraulic engineer.

TEL:0574-86587131 www.nbboye.net

BYZ09-50C-01G

直流湿式阀用电磁铁

DC solenoids for hydraulics valves

DC 24V
AC 220V

其它规格可定做
Other can be customized

- 适用于 6 通径液压电磁球阀
- 螺纹连接，线圈可实现免停机更换
- 配备手动应急装置
- 线圈内孔 ϕ23

- Applicable to 6-way hydraulic electomagnetic ball valve
- With threaded connection, the coil can be replaced without shutdown
- Equipped with manual emergency device
- Coil inner hole ϕ 23

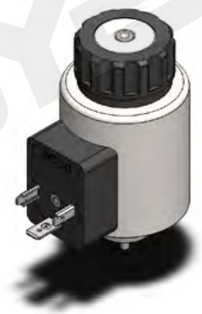

外形及连接尺寸

Outline and connection dimensions

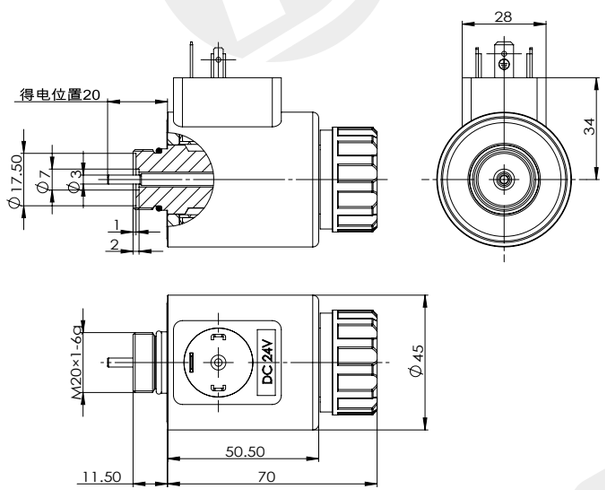

技术参数 /technical parameter		
环境温度 Ambient temperature	℃	-25~50
电压波动范围 Voltage fluctuation range	%	85~110
额定功率 Rated power	W	30
额定行程 Rated stroke	mm	2.8
全行程 Full stroke	mm	——
工作油压 Working oil pressure	Mpa	≤ 21
防护等级 Degree of protection		IP65
操作频率 Operating frequency	T/h	12000
通电持续率 Power on duration	%	100
绝缘等级 Insulation class		H(180)
电气连接方式 Electrical connection mode		DIN43650

注意事项

matters needing attention

1. 线圈不得单独通电使用，有烧损风险！
2. 非防爆线圈，不得使用在有爆炸危险的介质中！
3. 线圈安装后，必须接地可靠，否则有触电危险！

1. The coil shall not be powered on alone, which has the risk of burning!
2. Non explosion-proof coil shall not be used in medium with explosion risk!
3. After the coil is installed, it must be grounded reliably, otherwise there is a risk of electric shock！

力 - 位移特性曲线

F-S characteristic curve

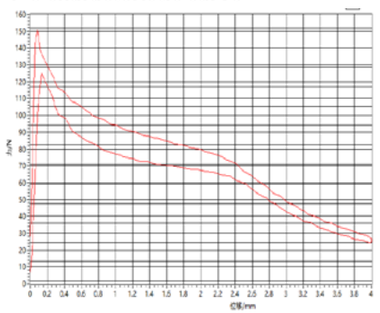

样本数据来源于试验室环境，仅供参考，贵公司如需最新数据或有特殊需求，欢迎联系搏液压工程师。
The sample data comes from the laboratory environment and is only for reference. If your company needs the latest data or has special needs, please contact Boye hydraulic engineer.

BYZ09-50C-02G

直流湿式阀用电磁铁

DC solenoids for hydraulics valves

DC 24V
AC 220V

其它规格可定做
Other can be customized

- 适用于 6 通径液压电磁球阀
- 螺纹连接，线圈可实现免停机更换
- 配备手动应急装置
- 线圈内孔 ϕ23

- Applicable to 6-way hydraulic electomagnetic ball valve
- With threaded connection, the coil can be replaced without shutdown
- Equipped with manual emergency device
- Coil inner hole ϕ 23

外形及连接尺寸

Outline and connection dimensions

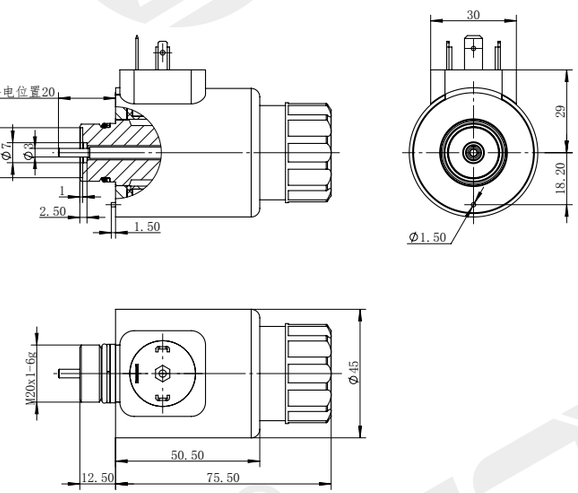

技术参数 /technical parameter		
环境温度 Ambient temperature	℃	-25~50
电压波动范围 Voltage fluctuation range	%	85~110
额定功率 Rated power	W	30
额定行程 Rated stroke	mm	2.8
全行程 Full stroke	mm	——
工作油压 Working oil pressure	Mpa	≤ 21
防护等级 Degree of protection		IP65
操作频率 Operating frequency	T/h	12000
通电持续率 Power on duration	%	100
绝缘等级 Insulation class		H(180)
电气连接方式 Electrical connection mode		DIN43650

注意事项

matters needing attention

1. 线圈不得单独通电使用，有烧损风险！
2. 非防爆线圈，不得使用在有爆炸危险的介质中！
3. 线圈安装后，必须接地可靠，否则有触电危险！

1. The coil shall not be powered on alone, which has the risk of burning!
2. Non explosion-proof coil shall not be used in medium with explosion risk!
3. After the coil is installed, it must be grounded reliably, otherwise there is a risk of electric shock！

力 - 位移特性曲线

F-S characteristic curve

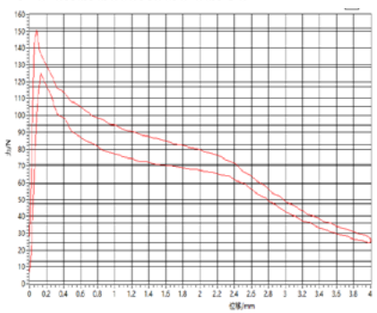

样本数据来源于试验室环境，仅供参考，贵公司如需最新数据或有特殊需求，欢迎联系搏液压工程师。
The sample data comes from the laboratory environment and is only for reference. If your company needs the latest data or has special needs, please contact Boye hydraulic engineer.

TEL:0574-86587131 www.nbboye.net

BYZ09-50L-01D

直流湿式阀用电磁铁

DC solenoids for hydraulics valves

DC 12V
DC 24V

其它规格可定做
Other can be customized

- 适用于 6 通径液压电磁换向阀
- 螺纹连接，线圈可实现免停机更换
- 配备手动应急装置
- 线圈内孔 ϕ23

- Applicable to 6-way hydraulic solenoid directional valve
- With threaded connection, the coil can be replaced without shutdown
- Equipped with manual emergency device
- Coil inner hole ϕ 23

外形及连接尺寸

Outline and connection dimensions

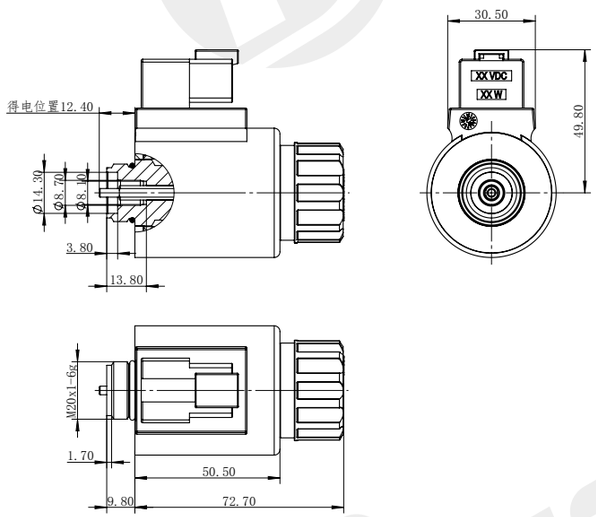

技术参数 /technical parameter		
环境温度 Ambient temperature	℃	-25~50
电压波动范围 Voltage fluctuation range	%	85~110
额定功率 Rated power	W	22
额定行程 Rated stroke	mm	2.8
全行程 Full stroke	mm	⩾ 6.1
工作油压 Working oil pressure	Mpa	⩽ 21
防护等级 Degree of protection		IP67
操作频率 Operating frequency	T/h	12000
通电持续率 Power on duration	%	100
绝缘等级 Insulation class		H(180)
电气连接方式 Electrical connection mode		DT04-2P

注意事项

matters needing attention

1. 线圈不得单独通电使用，有烧损风险！
2. 非防爆线圈，不得使用在有爆炸危险的介质中！
3. 线圈安装后，必须接地可靠，否则有触电危险！

1. The coil shall not be powered on alone, which has the risk of burning!
2. Non explosion-proof coil shall not be used in medium with explosion risk!
3. After the coil is installed, it must be grounded reliably, otherwise there is a risk of electric shock！

力 - 位移特性曲线

F-S characteristic curve

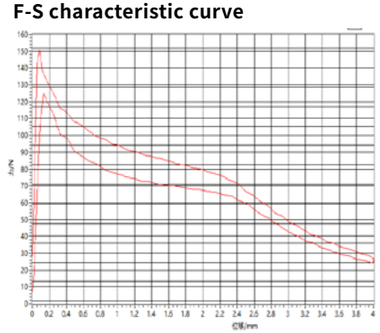

样本数据来源于试验室环境，仅供参考，贵公司如需最新数据或有特殊需求，欢迎联系搏业液压工程师。
The sample data comes from the laboratory environment and is only for reference. If your company needs the latest data or has special needs, please contact Boye hydraulic engineer.

BYZ09-50L-01G

直流湿式阀用电磁铁

DC solenoids for hydraulics valves

DC 24V
AC 220V

其它规格可定做
Other can be customized

- 适用于 6 通径液压电磁换向阀
- 螺纹连接，线圈可实现免停机更换
- 配备手动应急装置
- 线圈内孔 ϕ23

- Applicable to 6-way hydraulic solenoid directional valve
- With threaded connection, the coil can be replaced without shutdown
- Equipped with manual emergency device
- Coil inner hole ϕ 23

外形及连接尺寸

Outline and connection dimensions

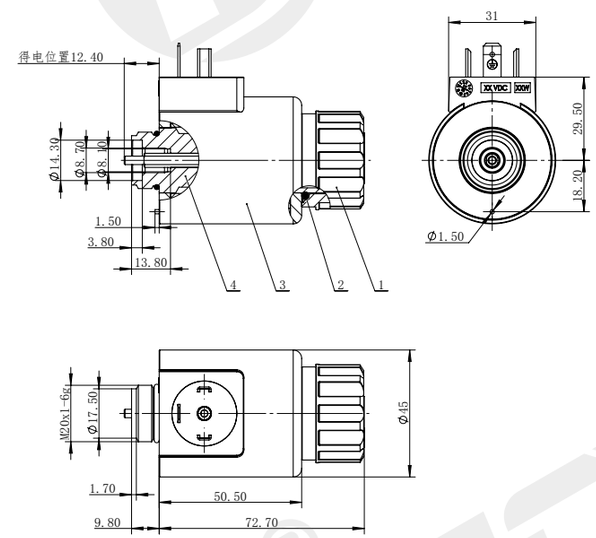

技术参数 /technical parameter		
环境温度 Ambient temperature	℃	-25~50
电压波动范围 Voltage fluctuation range	%	85~110
额定功率 Rated power	W	30
额定行程 Rated stroke	mm	2.8
全行程 Full stroke	mm	⩾ 6.1
工作油压 Working oil pressure	Mpa	⩽ 21
防护等级 Degree of protection		IP65
操作频率 Operating frequency	T/h	12000
通电持续率 Power on duration	%	100
绝缘等级 Insulation class		H(180)
电气连接方式 Electrical connection mode		DIN43650

注意事项

matters needing attention

1. 线圈不得单独通电使用，有烧损风险！
2. 非防爆线圈，不得使用在有爆炸危险的介质中！
3. 线圈安装后，必须接地可靠，否则有触电危险！

1. The coil shall not be powered on alone, which has the risk of burning!
2. Non explosion-proof coil shall not be used in medium with explosion risk!
3. After the coil is installed, it must be grounded reliably, otherwise there is a risk of electric shock！

力 - 位移特性曲线

F-S characteristic curve

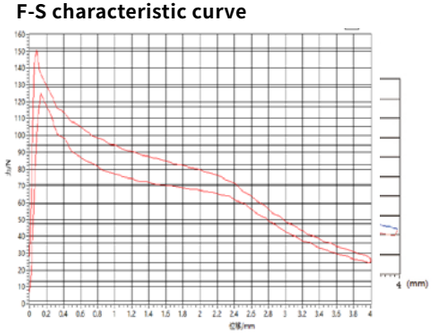

样本数据来源于试验室环境，仅供参考，贵公司如需最新数据或有特殊需求，欢迎联系搏业液压工程师。
The sample data comes from the laboratory environment and is only for reference. If your company needs the latest data or has special needs, please contact Boye hydraulic engineer.

BYZ09-50G-01D

直流湿式阀用电磁铁
DC solenoids for hydraulics valves

DC 12V
DC 24V

其它规格可定做
Other can be customized

- 适用于 6 通径液压电磁换向阀
- 螺纹连接，线圈可实现免停机更换
- 配备手动应急装置
- 线圈内孔 ϕ23，全塑封工艺

- Applicable to 6-way hydraulic solenoid directional valve
- With threaded connection, the coil can be replaced without shutdown
- Equipped with manual emergency device
- Coil inner hole ϕ 23, Full plastic sealing process

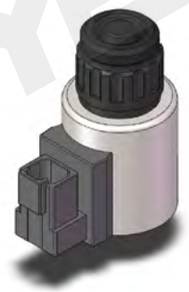

外形及连接尺寸
Outline and connection dimensions

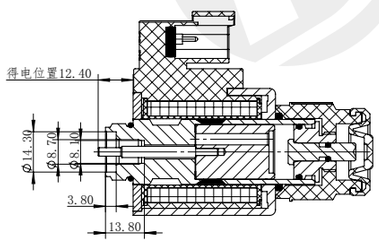

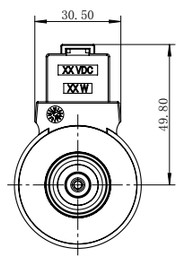

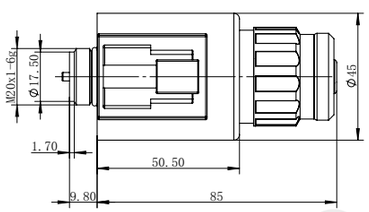

技术参数 /technical parameter Технические характеристики		
环境温度 Ambient temperature Температураокружающей среды	℃	-25~50
电压波动范围 Voltage fluctuation range диапазон колебаний напряжения	%	85~110
额定功率 Rated power Номинальная мощность	W	22
额定行程 Rated stroke Номинальный ход	mm	2.8
全行程 Full stroke Полный ход	mm	⩾ 6.1
工作油压 Working oil pressure Рабочее давление масла	Mpa	⩽ 21
防护等级 Degree of protection Степень защиты		IP67
操作频率 Operating frequency Рабочая частота	T/h	12000
通电持续率 Power on duration Длительность включения	%	100
绝缘等级 Insulation class Класс изоляции		H(180)
电气连接方式 Electrical connection mode Режим электрического подключения		DT04-2P

注意事项
matters needing attention

1. 线圈不得单独通电使用，有烧损风险！
2. 非防爆线圈，不得使用在有爆炸危险的介质中！
3. 线圈安装后，必须接地可靠，否则有触电危险！

1. The coil shall not be powered on alone, which has the risk of burning!
2. Non explosion-proof coil shall not be used in medium with explosion risk!
3. After the coil is installed, it must be grounded reliably, otherwise there is a risk of electric shock！

力 - 位移特性曲线
F-S characteristic curve

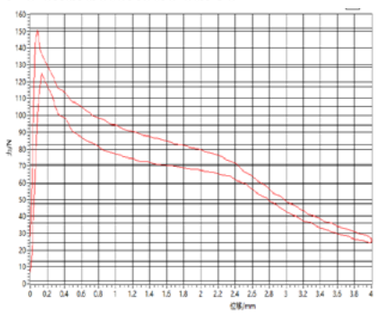

样本数据来源于试验室环境，仅供参考，贵公司如需最新数据或有特殊需求，欢迎联系搏业液压工程师。
The sample data comes from the laboratory environment and is only for reference. If your company needs the latest data or has special needs, please contact Boye hydraulic engineer.

BYZ09-60-01G

直流湿式阀用电磁铁
DC solenoids for hydraulics valves

DC 24V
AC 220V

其它规格可定做
Other can be customized

- 适用于 10 通径液压电磁换向阀
- 螺纹连接，线圈可实现免停机更换
- 配备手动应急装置
- 线圈内孔 ϕ27

- Applicable to 10-way hydraulic solenoid directional valve
- With threaded connection, the coil can be replaced without shutdown
- Equipped with manual emergency device
- Coil inner hole ϕ27

外形及连接尺寸
Outline and connection dimensions

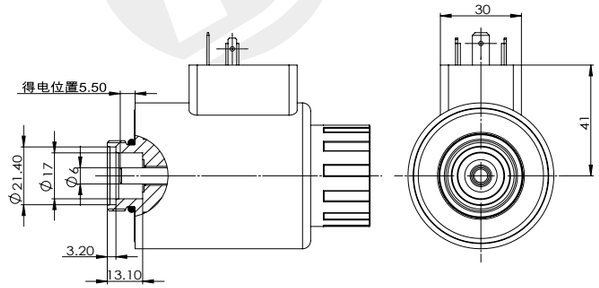

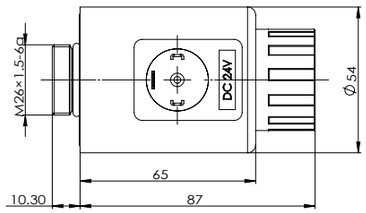

技术参数 /technical parameter		
环境温度 Ambient temperature	℃	-25~40
电压波动范围 Voltage fluctuation range	%	85~110
额定功率 Rated power	W	35
额定行程 Rated stroke	mm	4
全行程 Full stroke	mm	⩾ 8.5
工作油压 Working oil pressure	Mpa	⩽ 21
防护等级 Degree of protection		IP65
操作频率 Operating frequency	T/h	12000
通电持续率 Power on duration	%	100
绝缘等级 Insulation class		H(180)
电气连接方式 Electrical connection mode		DIN43650

注意事项
matters needing attention

1. 线圈不得单独通电使用，有烧损风险！
2. 非防爆线圈，不得使用在有爆炸危险的介质中！
3. 线圈安装后，必须接地可靠，否则有触电危险！

1. The coil shall not be powered on alone, which has the risk of burning!
2. Non explosion-proof coil shall not be used in medium with explosion risk!
3. After the coil is installed, it must be grounded reliably, otherwise there is a risk of electric shock！

力 - 位移特性曲线
F-S characteristic curve

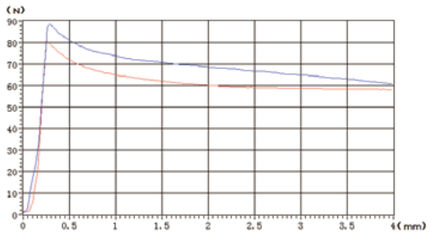

样本数据来源于试验室环境，仅供参考，贵公司如需最新数据或有特殊需求，欢迎联系搏业液压工程师。
The sample data comes from the laboratory environment and is only for reference. If your company needs the latest data or has special needs, please contact Boye hydraulic engineer.

BYZ09-120-01A

直流湿式阀用电磁铁

DC solenoids for hydraulics valves

DC 24V
AC 220V

其它规格可定做
Other can be customized

- 适用于 10 通径液压电磁换向阀
- 螺纹连接，线圈可实现免停机更换
- 配备手动应急装置
- 线圈内孔 ϕ31.5，外径 ϕ60

- Applicable to 10-way hydraulic solenoid directional valve
- With threaded connection, the coil can be replaced without shutdown
- Equipped with manual emergency device
- Coil inner hole ϕ 31.5，outer diameter ϕ60

外形及连接尺寸

Outline and connection dimensions

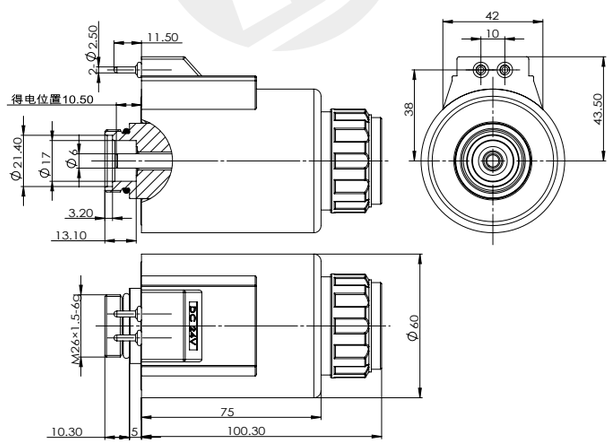

技术参数 /technical parameter		
环境温度 Ambient temperature	℃	-10~40
电压波动范围 Voltage fluctuation range	%	85~110
额定功率 Rated power	W	40
额定行程 Rated stroke	mm	4
全行程 Full stroke	mm	⩾ 8.5
工作油压 Working oil pressure	Mpa	⩽ 21
防护等级 Degree of protection		IP65
操作频率 Operating frequency	T/h	12000
通电持续率 Power on duration	%	100
绝缘等级 Insulation class		H180
电气连接方式 Electrical connection mode		接线盒式

注意事项

matters needing attention

1. 线圈不得单独通电使用，有烧损风险！
2. 非防爆线圈，不得使用在有爆炸危险的介质中！
3. 线圈安装后，必须接地可靠，否则有触电危险！

1. The coil shall not be powered on alone, which has the risk of burning!
2. Non explosion-proof coil shall not be used in medium with explosion risk!
3. After the coil is installed, it must be grounded reliably, otherwise there is a risk of electric shock！

力 - 位移特性曲线

F-S characteristic curve

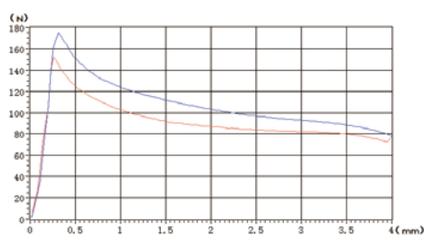

样本数据来源于试验室环境，仅供参考，贵公司如需最新数据或有特殊需求，欢迎联系搏业液压工程师。
The sample data comes from the laboratory environment and is only for reference. If your company needs the latest data or has special needs, please contact Boye hydraulic engineer.

BYZ09-120-01G

直流湿式阀用电磁铁

DC solenoids for hydraulics valves

DC 24V
AC 220V

其它规格可定做
Other can be customized

- 适用于 10 通径液压电磁换向阀
- 螺纹连接，线圈可实现免停机更换
- 配备手动应急装置
- 线圈内孔 ϕ31.5，外径 ϕ60

- Applicable to 10-way hydraulic solenoid directional valve
- With threaded connection, the coil can be replaced without shutdown
- Equipped with manual emergency device
- Coil inner hole ϕ 31.5，outer diameter ϕ60

外形及连接尺寸

Outline and connection dimensions

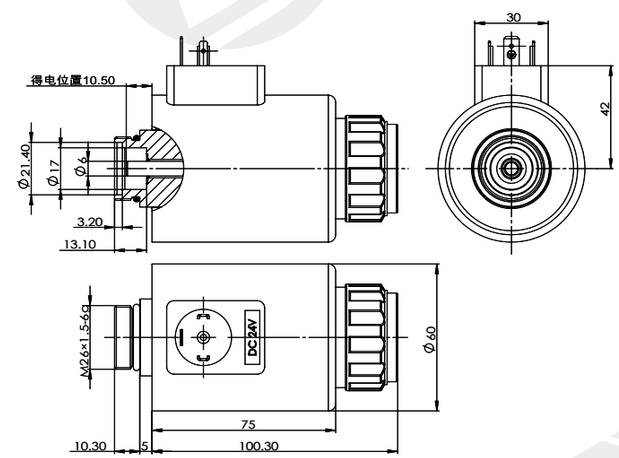

技术参数 /technical parameter		
环境温度 Ambient temperature	℃	-10~40
电压波动范围 Voltage fluctuation range	%	85~110
额定功率 Rated power	W	40
额定行程 Rated stroke	mm	4
全行程 Full stroke	mm	⩾ 8.5
工作油压 Working oil pressure	Mpa	⩽ 21
防护等级 Degree of protection		IP65
操作频率 Operating frequency	T/h	12000
通电持续率 Power on duration	%	100
绝缘等级 Insulation class		H180
电气连接方式 Electrical connection mode		DIN43650

注意事项

matters needing attention

1. 线圈不得单独通电使用，有烧损风险！
2. 非防爆线圈，不得使用在有爆炸危险的介质中！
3. 线圈安装后，必须接地可靠，否则有触电危险！

1. The coil shall not be powered on alone, which has the risk of burning!
2. Non explosion-proof coil shall not be used in medium with explosion risk!
3. After the coil is installed, it must be grounded reliably, otherwise there is a risk of electric shock！

力 - 位移特性曲线

F-S characteristic curve

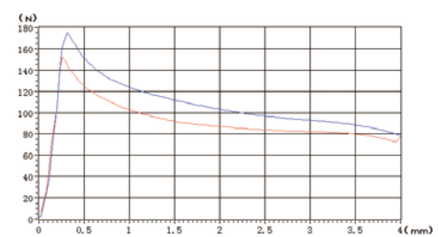

样本数据来源于试验室环境，仅供参考，贵公司如需最新数据或有特殊需求，欢迎联系搏业液压工程师。
The sample data comes from the laboratory environment and is only for reference. If your company needs the latest data or has special needs, please contact Boye hydraulic engineer.

BYZ09-120A-01D

直流湿式阀用电磁铁
DC solenoids for hydraulics valves

DC 12V
DC 24V

其它规格可定做
Other can be customized

- 适用于 10 通径液压电磁换向阀
- 螺纹连接，线圈可实现免停机更换
- 配备手动应急装置
- 线圈内孔 ϕ31.5，外径 ϕ62，全塑封工艺

- Applicable to 10-way hydraulic solenoid directional valve
- With threaded connection, the coil can be replaced without shutdown
- Equipped with manual emergency device
- Coil inner hole ϕ31.5, outer diameter ϕ62, full plastic sealing process

外形及连接尺寸
Outline and connection dimensions

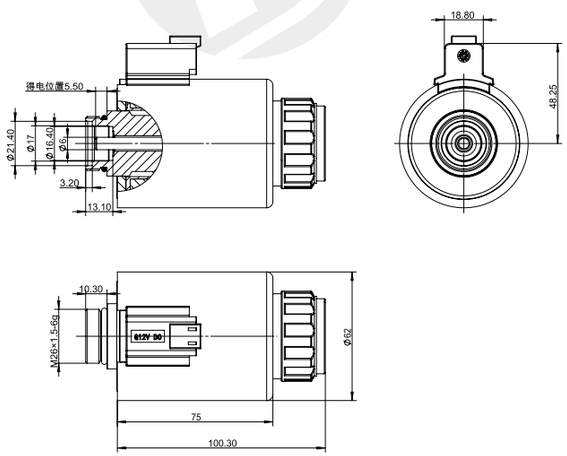

技术参数 /technical parameter		
环境温度 Ambient temperature	℃	-25~50
电压波动范围 Voltage fluctuation range	%	85~110
额定功率 Rated power	W	40
额定行程 Rated stroke	mm	4
全行程 Full stroke	mm	⩾ 8.5
工作油压 Working oil pressure	Mpa	⩽ 21
防护等级 Degree of protection		IP67
操作频率 Operating frequency	T/h	12000
通电持续率 Power on duration	%	100
绝缘等级 Insulation class		H(180)
电气连接方式 Electrical connection mode		DT04-2P

注意事项
matters needing attention

1. 线圈不得单独通电使用，有烧损风险！
2. 非防爆线圈，不得使用在有爆炸危险的介质中！
3. 线圈安装后，必须接地可靠，否则有触电危险！

1. The coil shall not be powered on alone, which has the risk of burning!
2. Non explosion-proof coil shall not be used in medium with explosion risk!
3. After the coil is installed, it must be grounded reliably, otherwise there is a risk of electric shock！

力 - 位移特性曲线
F-S characteristic curve

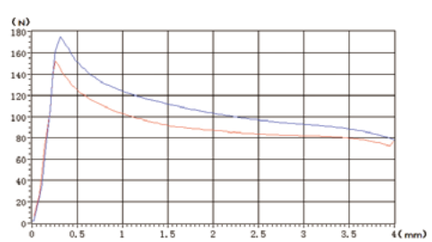

样本数据来源于试验室环境，仅供参考，贵公司如需最新数据或有特殊需求，欢迎联系搏业液压工程师。
The sample data comes from the laboratory environment and is only for reference. If your company needs the latest data or has special needs, please contact Boye hydraulic engineer.

BYZ09-120A-01G

直流湿式阀用电磁铁
DC solenoids for hydraulics valves

DC 24V
AC 220V

其它规格可定做
Other can be customized

- 适用于 10 通径液压电磁换向阀
- 螺纹连接，线圈可实现免停机更换
- 配备手动应急装置
- 线圈内孔 ϕ31.5，外径 ϕ62，全塑封工艺

- Applicable to 10-way hydraulic solenoid directional valve
- With threaded connection, the coil can be replaced without shutdown
- Equipped with manual emergency device
- Coil inner hole ϕ31.5, outer diameter ϕ62, full plastic sealing process

外形及连接尺寸
Outline and connection dimensions

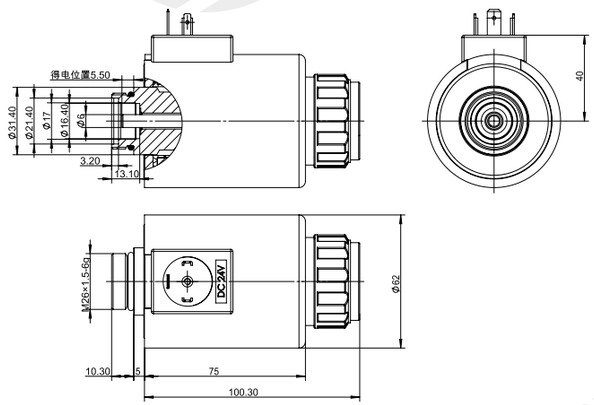

技术参数 /technical parameter		
环境温度 Ambient temperature	℃	-25~50
电压波动范围 Voltage fluctuation range	%	85~110
额定功率 Rated power	W	40
额定行程 Rated stroke	mm	4
全行程 Full stroke	mm	⩾ 8.5
工作油压 Working oil pressure	Mpa	⩽ 21
防护等级 Degree of protection		IP65
操作频率 Operating frequency	T/h	12000
通电持续率 Power on duration	%	100
绝缘等级 Insulation class		H(180)
电气连接方式 Electrical connection mode		DIN43650

注意事项
matters needing attention

1. 线圈不得单独通电使用，有烧损风险！
2. 非防爆线圈，不得使用在有爆炸危险的介质中！
3. 线圈安装后，必须接地可靠，否则有触电危险！

1. The coil shall not be powered on alone, which has the risk of burning!
2. Non explosion-proof coil shall not be used in medium with explosion risk!
3. After the coil is installed, it must be grounded reliably, otherwise there is a risk of electric shock！

力 - 位移特性曲线
F-S characteristic curve

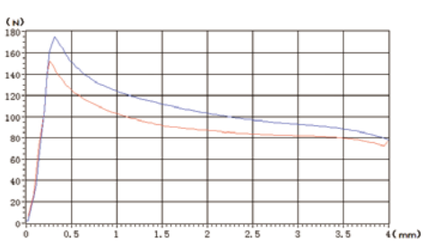

样本数据来源于试验室环境，仅供参考，贵公司如需最新数据或有特殊需求，欢迎联系搏业液压工程师。
The sample data comes from the laboratory environment and is only for reference. If your company needs the latest data or has special needs, please contact Boye hydraulic engineer.

BYZ09-120L-01D

直流湿式阀用电磁铁

DC solenoids for hydraulics valves

DC 12V
DC 24V

其它规格可定做
Other can be customized

- 适用于 10 通径液压电磁换向阀
- 螺纹连接，线圈可实现免停机更换
- 配备手动应急装置
- 线圈内孔 ϕ31.5，外径 ϕ63，全塑封工艺

- Applicable to 10-way hydraulic solenoid directional valve
- With threaded connection, the coil can be replaced without shutdown
- Equipped with manual emergency device
- Coil inner hole ϕ31.5, outer diameter ϕ63, full plastic sealing process

外形及连接尺寸

Outline and connection dimensions

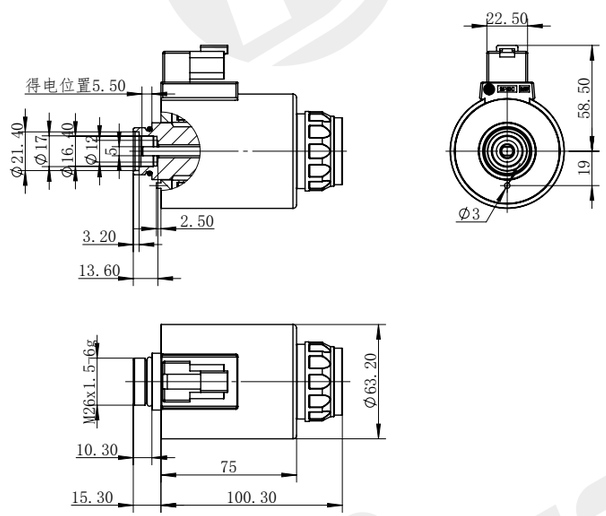

技术参数 /technical parameter		
环境温度 Ambient temperature	℃	-25~50
电压波动范围 Voltage fluctuation range	%	85~110
额定功率 Rated power	W	36
额定行程 Rated stroke	mm	4
全行程 Full stroke	mm	⩾ 8.5
工作油压 Working oil pressure	Mpa	⩽ 21
防护等级 Degree of protection		IP67
操作频率 Operating frequency	T/h	12000
通电持续率 Power on duration	%	100
绝缘等级 Insulation class		H(180)
电气连接方式 Electrical connection mode		DT04-2P

注意事项

matters needing attention

1. 线圈不得单独通电使用，有烧损风险！
2. 非防爆线圈，不得使用在有爆炸危险的介质中！
3. 线圈安装后，必须接地可靠，否则有触电危险！

1. The coil shall not be powered on alone, which has the risk of burning!
2. Non explosion-proof coil shall not be used in medium with explosion risk!
3. After the coil is installed, it must be grounded reliably, otherwise there is a risk of electric shock！

力 - 位移特性曲线

F-S characteristic curve

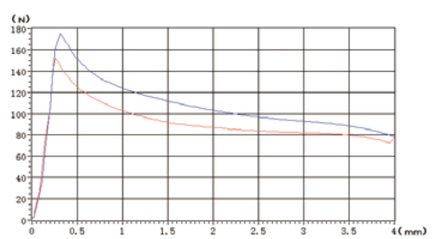

样本数据来源于试验室环境，仅供参考，贵公司如需最新数据或有特殊需求，欢迎联系搏业液压工程师。
The sample data comes from the laboratory environment and is only for reference. If your company needs the latest data or has special needs, please contact Boye hydraulic engineer.

BYZ09-120L-01G

直流湿式阀用电磁铁

DC solenoids for hydraulics valves

DC 24V
AC 220V

其它规格可定做
Other can be customized

- 适用于 10 通径液压电磁换向阀
- 螺纹连接，线圈可实现免停机更换
- 配备手动应急装置
- 线圈内孔 ϕ31.5，外径 ϕ63，全塑封工艺

- Applicable to 10-way hydraulic solenoid directional valve
- With threaded connection, the coil can be replaced without shutdown
- Equipped with manual emergency device
- Coil inner hole ϕ31.5, outer diameter ϕ63, full plastic sealing process

外形及连接尺寸

Outline and connection dimensions

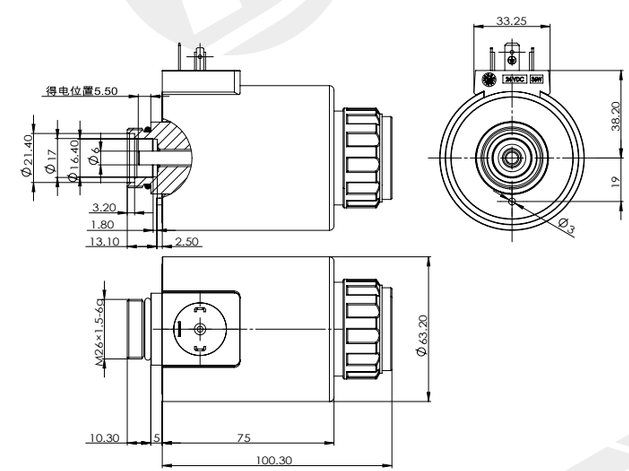

技术参数 /technical parameter		
环境温度 Ambient temperature	℃	-25~50
电压波动范围 Voltage fluctuation range	%	85~110
额定功率 Rated power	W	36
额定行程 Rated stroke	mm	4
全行程 Full stroke	mm	⩾ 8.5
工作油压 Working oil pressure	Mpa	⩽ 21
防护等级 Degree of protection		IP65
操作频率 Operating frequency	T/h	12000
通电持续率 Power on duration	%	100
绝缘等级 Insulation class		H(180)
电气连接方式 Electrical connection mode		DIN43650

注意事项

matters needing attention

1. 线圈不得单独通电使用，有烧损风险！
2. 非防爆线圈，不得使用在有爆炸危险的介质中！
3. 线圈安装后，必须接地可靠，否则有触电危险！

1. The coil shall not be powered on alone, which has the risk of burning!
2. Non explosion-proof coil shall not be used in medium with explosion risk!
3. After the coil is installed, it must be grounded reliably, otherwise there is a risk of electric shock！

力 - 位移特性曲线

F-S characteristic curve

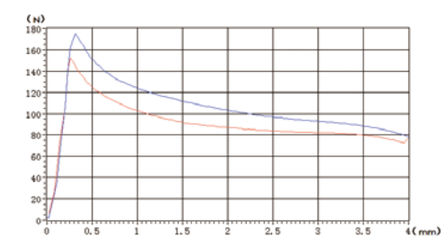

样本数据来源于试验室环境，仅供参考，贵公司如需最新数据或有特殊需求，欢迎联系搏业液压工程师。
The sample data comes from the laboratory environment and is only for reference. If your company needs the latest data or has special needs, please contact Boye hydraulic engineer.

BYZ11-40-01A

直流湿式阀用电磁铁

DC solenoids for hydraulics valves

DC 24V
AC 220V

其它规格可定做
Other can be customized

- 适用于 6 通径液压电磁换向阀
- 螺纹连接，线圈可实现免停机更换
- 配备手动应急装置
- 线圈内孔 ϕ19
- 采用 BMC 热固性塑料封装

- Applicable to 6-way hydraulic solenoid directional valve
- With threaded connection, the coil can be replaced without shutdown
- Equipped with manual emergency device
- Coil inner hole ϕ19
- Encapsulated in BMC thermosetting plastic

外形及连接尺寸

Outline and connection dimensions

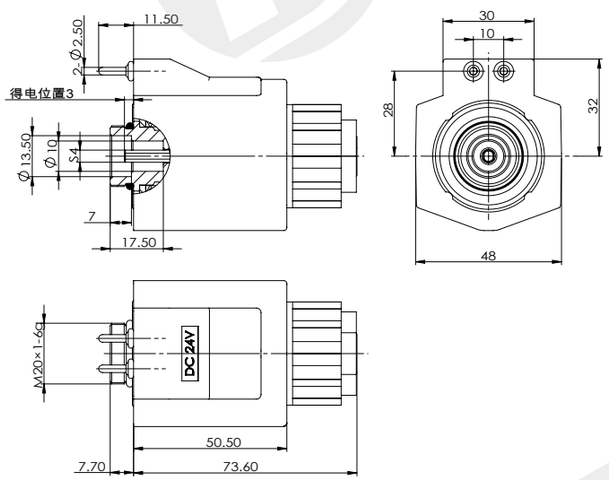

技术参数 /technical parameter		
环境温度 Ambient temperature	℃	-25~50
电压波动范围 Voltage fluctuation range	%	85~110
额定功率 Rated power	W	30
额定行程 Rated stroke	mm	3
全行程 Full stroke	mm	⩾ 6.1
工作油压 Working oil pressure	Mpa	⩽ 21
防护等级 Degree of protection		IP65
操作频率 Operating frequency	T/h	12000
通电持续率 Power on duration	%	100
绝缘等级 Insulation class		H(180)
电气连接方式 Electrical connection mode		接线盒式

注意事项

matters needing attention

1. 线圈不得单独通电使用，有烧损风险！
2. 非防爆线圈，不得使用在有爆炸危险的介质中！
3. 线圈安装后，必须接地可靠，否则有触电危险！

1. The coil shall not be powered on alone, which has the risk of burning!
2. Non explosion-proof coil shall not be used in medium with explosion risk!
3. After the coil is installed, it must be grounded reliably, otherwise there is a risk of electric shock！

力 - 位移特性曲线

F-S characteristic curve

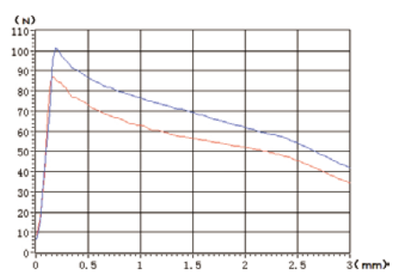

样本数据来源于试验室环境，仅供参考，贵公司如需最新数据或有特殊需求，欢迎联系搏业液压工程师。
The sample data comes from the laboratory environment and is only for reference. If your company needs the latest data or has special needs, please contact Boye hydraulic engineer.

BYZ11-40-01G

直流湿式阀用电磁铁

DC solenoids for hydraulics valves

DC 24V
AC 220V

其它规格可定做
Other can be customized

- 适用于 6 通径液压电磁换向阀
- 螺纹连接，线圈可实现免停机更换
- 配备手动应急装置
- 线圈内孔 ϕ19
- 采用 BMC 热固性塑料封装

- Applicable to 6-way hydraulic solenoid directional valve
- With threaded connection, the coil can be replaced without shutdown
- Equipped with manual emergency device
- Coil inner hole ϕ19
- Encapsulated in BMC thermosetting plastic

外形及连接尺寸

Outline and connection dimensions

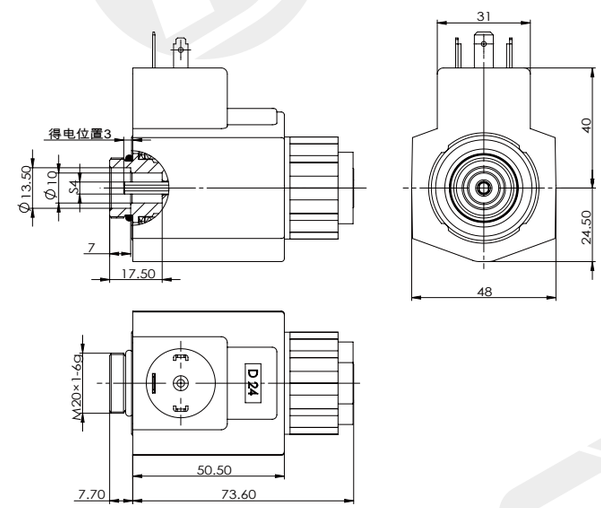

技术参数 /technical parameter		
环境温度 Ambient temperature	℃	-25~50
电压波动范围 Voltage fluctuation range	%	85~110
额定功率 Rated power	W	30
额定行程 Rated stroke	mm	3
全行程 Full stroke	mm	⩾ 6.1
工作油压 Working oil pressure	Mpa	⩽ 21
防护等级 Degree of protection		IP65
操作频率 Operating frequency	T/h	12000
通电持续率 Power on duration	%	100
绝缘等级 Insulation class		H(180)
电气连接方式 Electrical connection mode		DIN43650

注意事项

matters needing attention

1. 线圈不得单独通电使用，有烧损风险！
2. 非防爆线圈，不得使用在有爆炸危险的介质中！
3. 线圈安装后，必须接地可靠，否则有触电危险！

1. The coil shall not be powered on alone, which has the risk of burning!
2. Non explosion-proof coil shall not be used in medium with explosion risk!
3. After the coil is installed, it must be grounded reliably, otherwise there is a risk of electric shock！

力 - 位移特性曲线

F-S characteristic curve

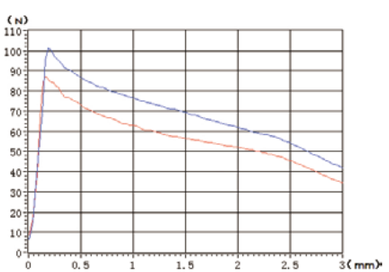

样本数据来源于试验室环境，仅供参考，贵公司如需最新数据或有特殊需求，欢迎联系搏业液压工程师。
The sample data comes from the laboratory environment and is only for reference. If your company needs the latest data or has special needs, please contact Boye hydraulic engineer.

BYZ11-50-01A

直流湿式阀用电磁铁

DC solenoids for hydraulics valves

DC 24V
AC 220V

其它规格可定做
Other can be customized

- 适用于 6 通径液压电磁换向阀
- 螺纹连接，线圈可实现免停机更换
- 配备手动应急装置
- 线圈内孔 ϕ23

- Applicable to 6-way hydraulic solenoid directional valve
- With threaded connection, the coil can be replaced without shutdown
- Equipped with manual emergency device
- Coil inner hole ϕ23

外形及连接尺寸

Outline and connection dimensions

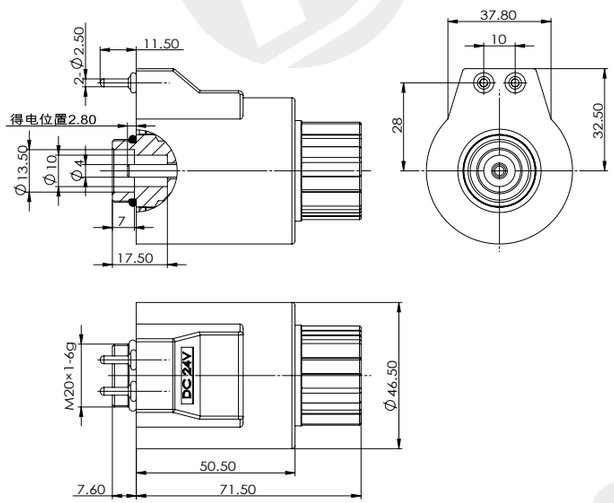

技术参数 /technical parameter		
环境温度 Ambient temperature	℃	-25~50
电压波动范围 Voltage fluctuation range	%	85~110
额定功率 Rated power	W	30
额定行程 Rated stroke	mm	3
全行程 Full stroke	mm	⩾ 6.1
工作油压 Working oil pressure	Mpa	⩽ 21
防护等级 Degree of protection		IP65
操作频率 Operating frequency	T/h	12000
通电持续率 Power on duration	%	100
绝缘等级 Insulation class		H(180)
电气连接方式 Electrical connection mode		接线盒式

注意事项

matters needing attention

1. 线圈不得单独通电使用，有烧损风险！
2. 非防爆线圈，不得使用在有爆炸危险的介质中！
3. 线圈安装后，必须接地可靠，否则有触电危险！

1. The coil shall not be powered on alone, which has the risk of burning!
2. Non explosion-proof coil shall not be used in medium with explosion risk!
3. After the coil is installed, it must be grounded reliably, otherwise there is a risk of electric shock！

力 - 位移特性曲线

F-S characteristic curve

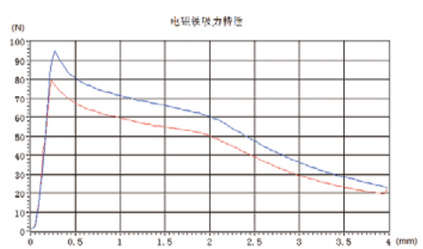

样本数据来源于试验室环境，仅供参考，贵公司如需最新数据或有特殊需求，欢迎联系搏业液压工程师。
The sample data comes from the laboratory environment and is only for reference. If your company needs the latest data or has special needs, please contact Boye hydraulic engineer.

BYZ11-50-01G

直流湿式阀用电磁铁

DC solenoids for hydraulics valves

DC 24V
AC 220V

其它规格可定做
Other can be customized

- 适用于 6 通径液压电磁换向阀
- 螺纹连接，线圈可实现免停机更换
- 配备手动应急装置
- 线圈内孔 ϕ23

- Applicable to 6-way hydraulic solenoid directional valve
- With threaded connection, the coil can be replaced without shutdown
- Equipped with manual emergency device
- Coil inner hole ϕ23

外形及连接尺寸

Outline and connection dimensions

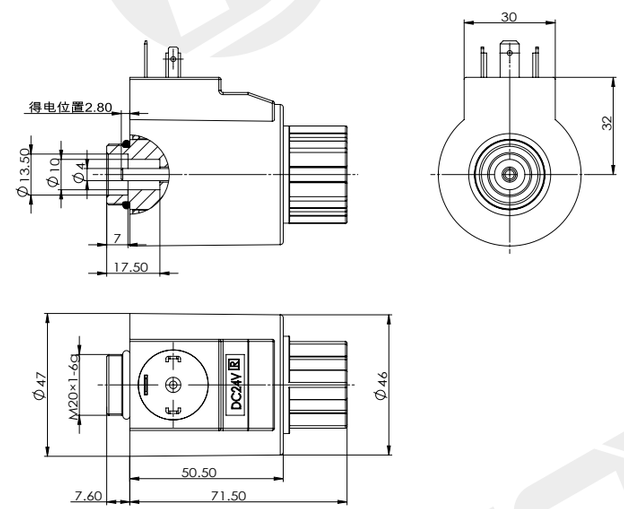

技术参数 /technical parameter		
环境温度 Ambient temperature	℃	-25~50
电压波动范围 Voltage fluctuation range	%	85~110
额定功率 Rated power	W	30
额定行程 Rated stroke	mm	3
全行程 Full stroke	mm	⩾ 6.1
工作油压 Working oil pressure	Mpa	⩽ 21
防护等级 Degree of protection		IP65
操作频率 Operating frequency	T/h	12000
通电持续率 Power on duration	%	100
绝缘等级 Insulation class		H(180)
电气连接方式 Electrical connection mode		DIN43650

注意事项

matters needing attention

1. 线圈不得单独通电使用，有烧损风险！
2. 非防爆线圈，不得使用在有爆炸危险的介质中！
3. 线圈安装后，必须接地可靠，否则有触电危险！

1. The coil shall not be powered on alone, which has the risk of burning!
2. Non explosion-proof coil shall not be used in medium with explosion risk!
3. After the coil is installed, it must be grounded reliably, otherwise there is a risk of electric shock！

力 - 位移特性曲线

F-S characteristic curve

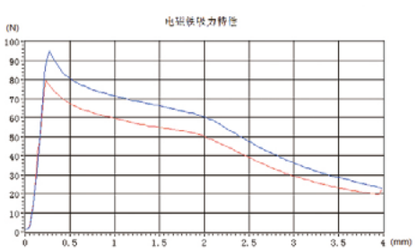

样本数据来源于试验室环境，仅供参考，贵公司如需最新数据或有特殊需求，欢迎联系搏业液压工程师。
The sample data comes from the laboratory environment and is only for reference. If your company needs the latest data or has special needs, please contact Boye hydraulic engineer.

BYZ11-50-02D

直流湿式阀用电磁铁

DC solenoids for hydraulics valves

DC 12V
DC 24V

其它规格可定做
Other can be customized

- 适用于 6 通径液压电磁换向阀
- 螺纹连接，线圈可实现免停机更换
- 配备手动应急装置
- 线圈内孔 ϕ23

- Applicable to 6-way hydraulic solenoid directional valve
- With threaded connection, the coil can be replaced without shutdown
- Equipped with manual emergency device
- Coil inner hole ϕ23

外形及连接尺寸

Outline and connection dimensions

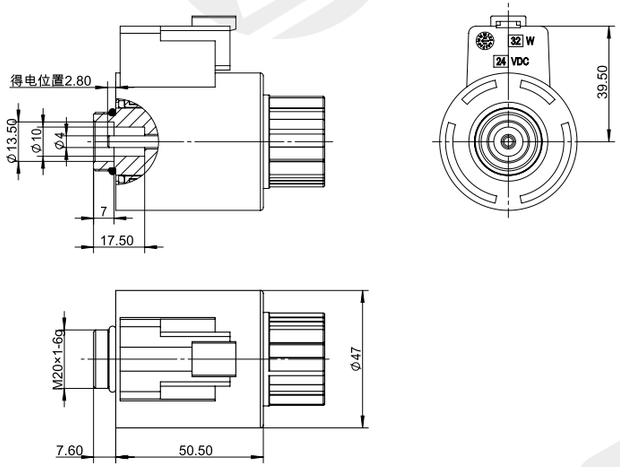

技术参数 /technical parameter		
环境温度 Ambient temperature	°C	-25~50
电压波动范围 Voltage fluctuation range	%	85~110
额定功率 Rated power	W	30
额定行程 Rated stroke	mm	3
全行程 Full stroke	mm	⩾ 6.1
工作油压 Working oil pressure	Mpa	⩽ 21
防护等级 Degree of protection		IP67
操作频率 Operating frequency	T/h	12000
通电持续率 Power on duration	%	100
绝缘等级 Insulation class		H(180)
电气连接方式 Electrical connection mode		DT04-2P

注意事项

matters needing attention

1. 线圈不得单独通电使用，有烧损风险！
2. 非防爆线圈，不得使用在有爆炸危险的介质中！
3. 线圈安装后，必须接地可靠，否则有触电危险！

1. The coil shall not be powered on alone, which has the risk of burning!
2. Non explosion-proof coil shall not be used in medium with explosion risk!
3. After the coil is installed, it must be grounded reliably, otherwise there is a risk of electric shock！

力 - 位移特性曲线

F-S characteristic curve

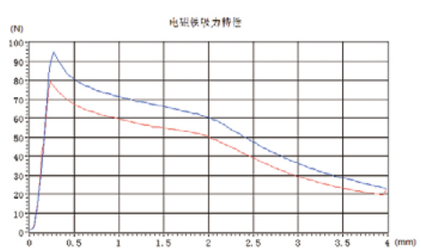

样本数据来源于试验室环境，仅供参考，贵公司如需最新数据或有特殊需求，欢迎联系搏业液压工程师。
The sample data comes from the laboratory environment and is only for reference. If your company needs the latest data or has special needs, please contact Boye hydraulic engineer.

BYZ11-90-01A

直流湿式阀用电磁铁
DC solenoids for hydraulics valves

DC 24V
AC 220V

其它规格可定做
Other can be customized

- 适用于 10 通径液压电磁换向阀
- 螺纹连接，线圈可实现免停机更换
- 配备手动应急装置
- 线圈内孔 ϕ31.5

- Applicable to 10-way hydraulic solenoid directional valve
- With threaded connection, the coil can be replaced without shutdown
- Equipped with manual emergency device
- Coil inner hole ϕ31.5

外形及连接尺寸
Outline and connection dimensions

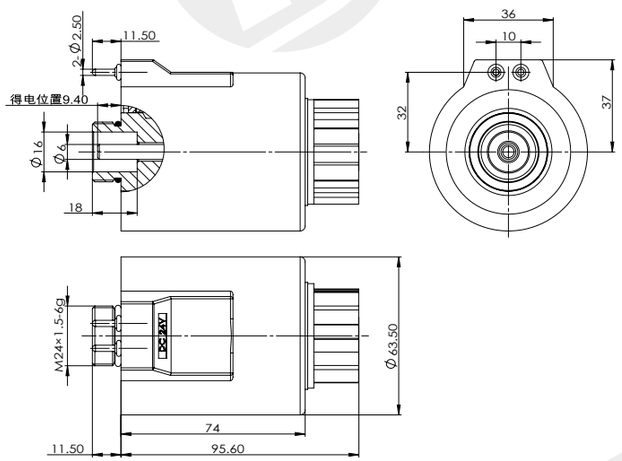

技术参数 /technical parameter		
环境温度 Ambient temperature	℃	-25~50
电压波动范围 Voltage fluctuation range	%	85~110
额定功率 Rated power	W	38
额定行程 Rated stroke	mm	4
全行程 Full stroke	mm	⩾ 8.5
工作油压 Working oil pressure	Mpa	⩽ 21
防护等级 Degree of protection		IP65
操作频率 Operating frequency	T/h	12000
通电持续率 Power on duration	%	100
绝缘等级 Insulation class		H(180)
电气连接方式 Electrical connection mode		接线盒式

注意事项
matters needing attention

1. 线圈不得单独通电使用，有烧损风险！
2. 非防爆线圈，不得使用在有爆炸危险的介质中！
3. 线圈安装后，必须接地可靠，否则有触电危险！

1. The coil shall not be powered on alone, which has the risk of burning!
2. Non explosion-proof coil shall not be used in medium with explosion risk!
3. After the coil is installed, it must be grounded reliably, otherwise there is a risk of electric shock！

力 - 位移特性曲线
F-S characteristic curve

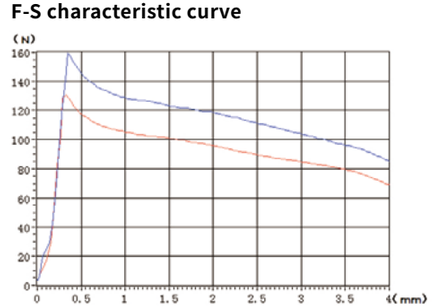

样本数据来源于试验室环境，仅供参考，贵公司如需最新数据或有特殊需求，欢迎联系搏业液压工程师。
The sample data comes from the laboratory environment and is only for reference. If your company needs the latest data or has special needs, please contact Boye hydraulic engineer.

BYZ11-90-01G

直流湿式阀用电磁铁
DC solenoids for hydraulics valves

DC 24V
AC 220V

其它规格可定做
Other can be customized

- 适用于 10 通径液压电磁换向阀
- 螺纹连接，线圈可实现免停机更换
- 配备手动应急装置
- 线圈内孔 ϕ31.5

- Applicable to 10-way hydraulic solenoid directional valve
- With threaded connection, the coil can be replaced without shutdown
- Equipped with manual emergency device
- Coil inner hole ϕ31.5

外形及连接尺寸
Outline and connection dimensions

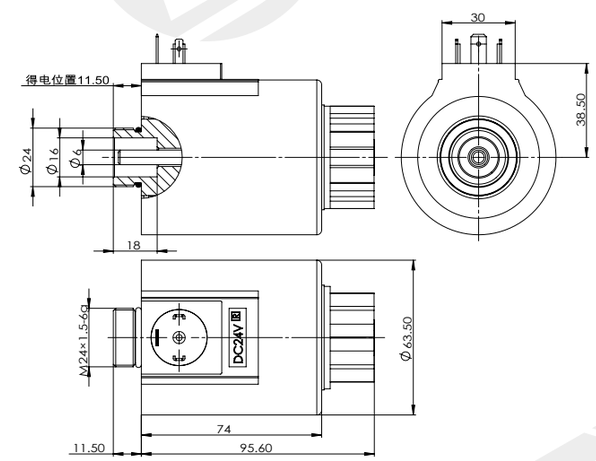

技术参数 /technical parameter		
环境温度 Ambient temperature	℃	-25~50
电压波动范围 Voltage fluctuation range	%	85~110
额定功率 Rated power	W	38
额定行程 Rated stroke	mm	4
全行程 Full stroke	mm	⩾ 8.5
工作油压 Working oil pressure	Mpa	⩽ 21
防护等级 Degree of protection		IP65
操作频率 Operating frequency	T/h	12000
通电持续率 Power on duration	%	100
绝缘等级 Insulation class		H(180)
电气连接方式 Electrical connection mode		DIN43650

注意事项
matters needing attention

1. 线圈不得单独通电使用，有烧损风险！
2. 非防爆线圈，不得使用在有爆炸危险的介质中！
3. 线圈安装后，必须接地可靠，否则有触电危险！

1. The coil shall not be powered on alone, which has the risk of burning!
2. Non explosion-proof coil shall not be used in medium with explosion risk!
3. After the coil is installed, it must be grounded reliably, otherwise there is a risk of electric shock！

力 - 位移特性曲线
F-S characteristic curve

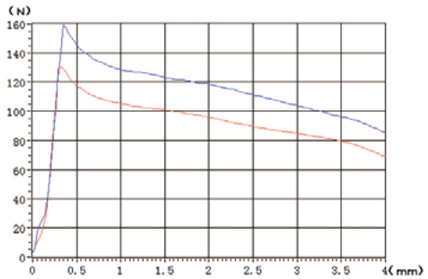

样本数据来源于试验室环境，仅供参考，贵公司如需最新数据或有特殊需求，欢迎联系搏业液压工程师。
The sample data comes from the laboratory environment and is only for reference. If your company needs the latest data or has special needs, please contact Boye hydraulic engineer.

BYZ12-40-01A

直流湿式阀用电磁铁
DC solenoids for hydraulics valves

DC 24V
AC 220V

其它规格可定做
Other can be customized

- 适用于 6 通径液压电磁换向阀
- 螺纹连接，线圈可实现免停机更换
- 配备手动应急装置
- 线圈内孔 ϕ20
- 采用 BMC 热固性塑料封装

- Applicable to 6-way hydraulic solenoid directional valve
- With threaded connection, the coil can be replaced without shutdown
- Equipped with manual emergency device
- Coil inner hole ϕ20
- Encapsulated in BMC thermosetting plastic

外形及连接尺寸
Outline and connection dimensions

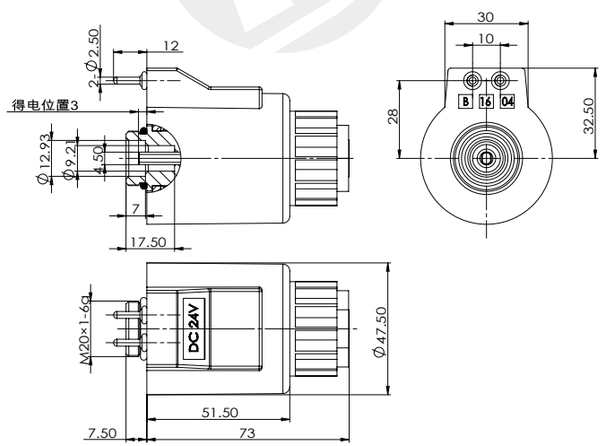

技术参数 /technical parameter		
环境温度 Ambient temperature	℃	-25~50
电压波动范围 Voltage fluctuation range	%	85~110
额定功率 Rated power	W	30
额定行程 Rated stroke	mm	3
全行程 Full stroke	mm	⩾ 6.5
工作油压 Working oil pressure	Mpa	⩽ 21
防护等级 Degree of protection		IP65
操作频率 Operating frequency	T/h	12000
通电持续率 Power on duration	%	100
绝缘等级 Insulation class		H(180)
电气连接方式 Electrical connection mode		接线盒式

注意事项
matters needing attention

1. 线圈不得单独通电使用，有烧损风险！
2. 非防爆线圈，不得使用在有爆炸危险的介质中！
3. 线圈安装后，必须接地可靠，否则有触电危险！

1. The coil shall not be powered on alone, which has the risk of burning!
2. Non explosion-proof coil shall not be used in medium with explosion risk!
3. After the coil is installed, it must be grounded reliably, otherwise there is a risk of electric shock！

力 - 位移特性曲线
F-S characteristic curve

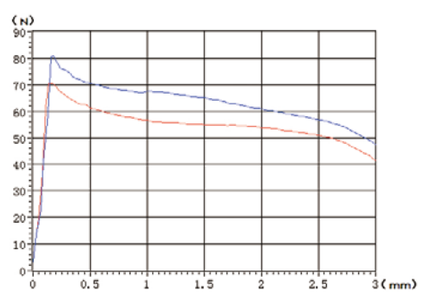

样本数据来源于试验室环境，仅供参考，贵公司如需最新数据或有特殊需求，欢迎联系博业液压工程师。
The sample data comes from the laboratory environment and is only for reference. If your company needs the latest data or has special needs, please contact Boye hydraulic engineer.

BYZ12-40-01G

直流湿式阀用电磁铁
DC solenoids for hydraulics valves

DC 24V
AC 220V

其它规格可定做
Other can be customized

- 适用于 6 通径液压电磁换向阀
- 螺纹连接，线圈可实现免停机更换
- 配备手动应急装置
- 线圈内孔 ϕ20
- 采用 BMC 热固性塑料封装

- Applicable to 6-way hydraulic solenoid directional valve
- With threaded connection, the coil can be replaced without shutdown
- Equipped with manual emergency device
- Coil inner hole ϕ20
- Encapsulated in BMC thermosetting plastic

外形及连接尺寸
Outline and connection dimensions

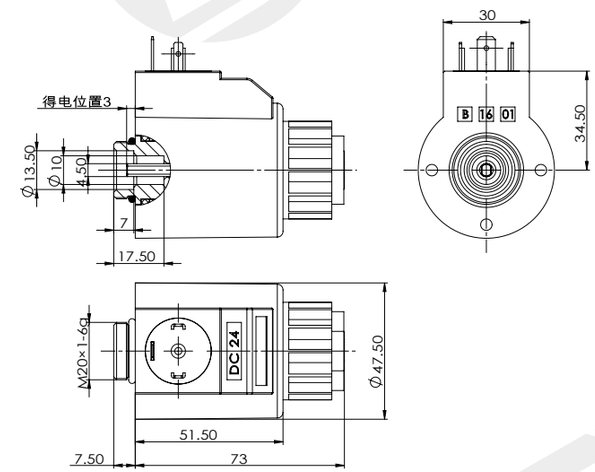

技术参数 /technical parameter		
环境温度 Ambient temperature	℃	-25~50
电压波动范围 Voltage fluctuation range	%	85~110
额定功率 Rated power	W	30
额定行程 Rated stroke	mm	3
全行程 Full stroke	mm	⩾ 6.5
工作油压 Working oil pressure	Mpa	⩽ 21
防护等级 Degree of protection		IP65
操作频率 Operating frequency	T/h	12000
通电持续率 Power on duration	%	100
绝缘等级 Insulation class		H(180)
电气连接方式 Electrical connection mode		DIN43650

注意事项
matters needing attention

1. 线圈不得单独通电使用，有烧损风险！
2. 非防爆线圈，不得使用在有爆炸危险的介质中！
3. 线圈安装后，必须接地可靠，否则有触电危险！

1. The coil shall not be powered on alone, which has the risk of burning!
2. Non explosion-proof coil shall not be used in medium with explosion risk!
3. After the coil is installed, it must be grounded reliably, otherwise there is a risk of electric shock！

力 - 位移特性曲线
F-S characteristic curve

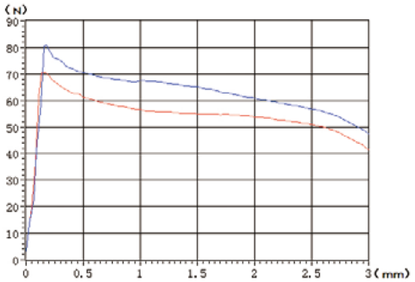

样本数据来源于试验室环境，仅供参考，贵公司如需最新数据或有特殊需求，欢迎联系博业液压工程师。
The sample data comes from the laboratory environment and is only for reference. If your company needs the latest data or has special needs, please contact Boye hydraulic engineer.

BYZ12-90-01A

直流湿式阀用电磁铁

DC solenoids for hydraulics valves

DC 24V
AC 220V

其它规格可定做
Other can be customized

- 适用于 10 通径液压电磁换向阀
- 螺纹连接，线圈可实现免停机更换
- 配备手动应急装置
- 线圈内孔 ϕ26
- 采用 BMC 热固性塑料封装

- Applicable to 10-way hydraulic solenoid directional valve
- With threaded connection, the coil can be replaced without shutdown
- Equipped with manual emergency device
- Coil inner hole ϕ26
- Encapsulated in BMC thermosetting plastic

外形及连接尺寸

Outline and connection dimensions

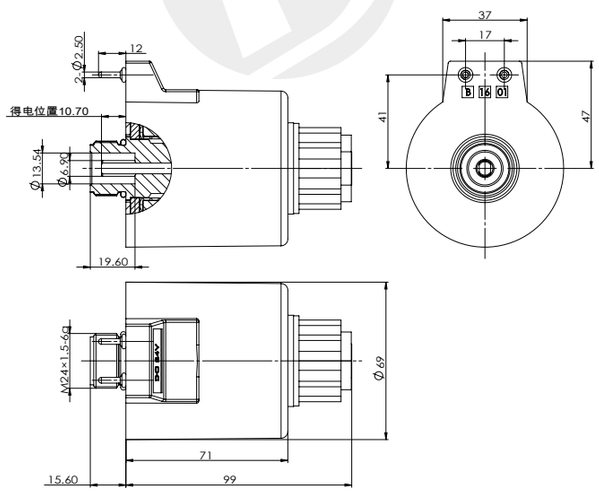

技术参数 /technical parameter		
环境温度 Ambient temperature	°C	-25~50
电压波动范围 Voltage fluctuation range	%	85~110
额定功率 Rated power	W	38
额定行程 Rated stroke	mm	4
全行程 Full stroke	mm	⩾ 9
工作油压 Working oil pressure	Mpa	⩽ 21
防护等级 Degree of protection		IP65
操作频率 Operating frequency	T/h	12000
通电持续率 Power on duration	%	100
绝缘等级 Insulation class		H(180)
电气连接方式 Electrical connection mode		接线盒式

注意事项

matters needing attention

1. 线圈不得单独通电使用，有烧损风险！
2. 非防爆线圈，不得使用在有爆炸危险的介质中！
3. 线圈安装后，必须接地可靠，否则有触电危险！

1. The coil shall not be powered on alone, which has the risk of burning!
2. Non explosion-proof coil shall not be used in medium with explosion risk!
3. After the coil is installed, it must be grounded reliably, otherwise there is a risk of electric shock！

力 - 位移特性曲线

F-S characteristic curve

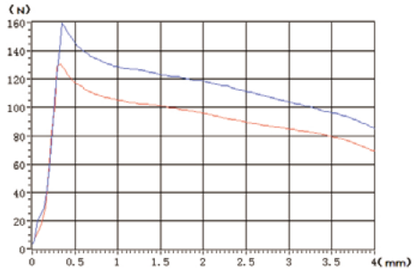

样本数据来源于试验室环境，仅供参考，贵公司如需最新数据或有特殊需求，欢迎联系搏业液压工程师。
The sample data comes from the laboratory environment and is only for reference. If your company needs the latest data or has special needs, please contact Boye hydraulic engineer.

BYZ12-90-01G

直流湿式阀用电磁铁

DC solenoids for hydraulics valves

DC 24V
AC 220V

其它规格可定做
Other can be customized

- 适用于 10 通径液压电磁换向阀
- 螺纹连接，线圈可实现免停机更换
- 配备手动应急装置
- 线圈内孔 ϕ26
- 采用 BMC 热固性塑料封装

- Applicable to 10-way hydraulic solenoid directional valve
- With threaded connection, the coil can be replaced without shutdown
- Equipped with manual emergency device
- Coil inner hole ϕ26
- Encapsulated in BMC thermosetting plastic

外形及连接尺寸

Outline and connection dimensions

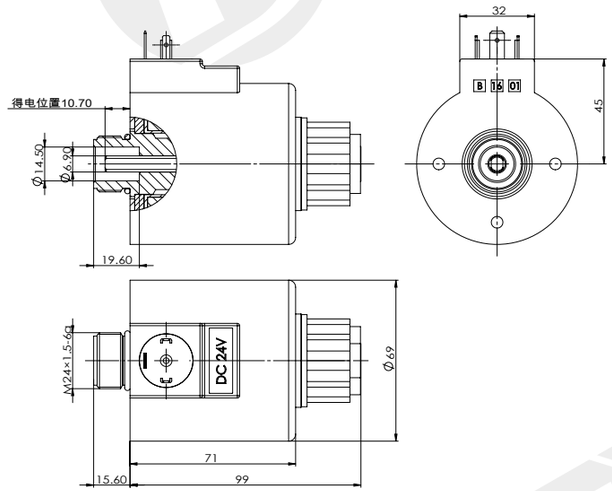

技术参数 /technical parameter		
环境温度 Ambient temperature	°C	-25~50
电压波动范围 Voltage fluctuation range	%	85~110
额定功率 Rated power	W	38
额定行程 Rated stroke	mm	4
全行程 Full stroke	mm	⩾ 9
工作油压 Working oil pressure	Mpa	⩽ 21
防护等级 Degree of protection		IP65
操作频率 Operating frequency	T/h	12000
通电持续率 Power on duration	%	100
绝缘等级 Insulation class		H(180)
电气连接方式 Electrical connection mode		DIN43650

注意事项

matters needing attention

1. 线圈不得单独通电使用，有烧损风险！
2. 非防爆线圈，不得使用在有爆炸危险的介质中！
3. 线圈安装后，必须接地可靠，否则有触电危险！

1. The coil shall not be powered on alone, which has the risk of burning!
2. Non explosion-proof coil shall not be used in medium with explosion risk!
3. After the coil is installed, it must be grounded reliably, otherwise there is a risk of electric shock！

力 - 位移特性曲线

F-S characteristic curve

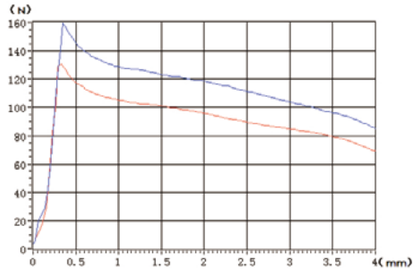

样本数据来源于试验室环境，仅供参考，贵公司如需最新数据或有特殊需求，欢迎联系搏业液压工程师。
The sample data comes from the laboratory environment and is only for reference. If your company needs the latest data or has special needs, please contact Boye hydraulic engineer.

BYZ16-40-01D

直流湿式阀用电磁铁

DC solenoids for hydraulics valves

DC 12V
DC 24V

其它规格可定做
Other can be customized

- 适用于 4 通径液压电磁换向阀
- 螺纹连接，线圈可实现免停机更换
- 配备手动应急装置
- 线圈内孔 ϕ19

- Applicable to 4-way hydraulic solenoid directional valve
- With threaded connection, the coil can be replaced without shutdown
- Equipped with manual emergency device
- Coil inner hole ϕ19

外形及连接尺寸

Outline and connection dimensions

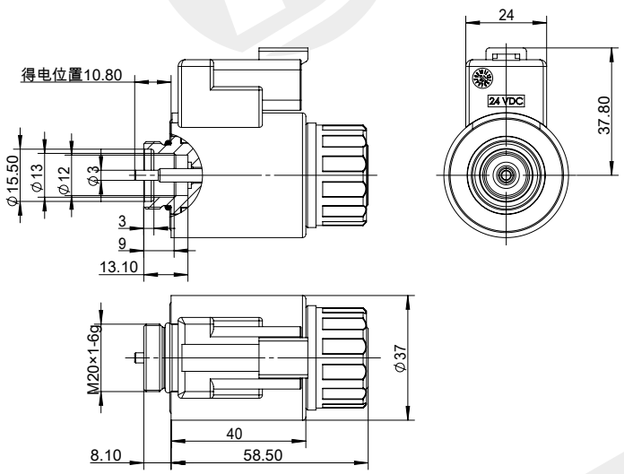

技术参数 /technical parameter		
环境温度 Ambient temperature	℃	-25~50
电压波动范围 Voltage fluctuation range	%	85~110
额定功率 Rated power	W	18
额定行程 Rated stroke	mm	2
全行程 Full stroke	mm	⩾ 4.5
工作油压 Working oil pressure	Mpa	⩽ 21
防护等级 Degree of protection		IP67
操作频率 Operating frequency	T/h	12000
通电持续率 Power on duration	%	100
绝缘等级 Insulation class		H(180)
电气连接方式 Electrical connection mode		DT04-2P

注意事项

matters needing attention

1. 线圈不得单独通电使用，有烧损风险！
2. 非防爆线圈，不得使用在有爆炸危险的介质中！
3. 线圈安装后，必须接地可靠，否则有触电危险！

1. The coil shall not be powered on alone, which has the risk of burning!
2. Non explosion-proof coil shall not be used in medium with explosion risk!
3. After the coil is installed, it must be grounded reliably, otherwise there is a risk of electric shock！

力 - 位移特性曲线

F-S characteristic curve

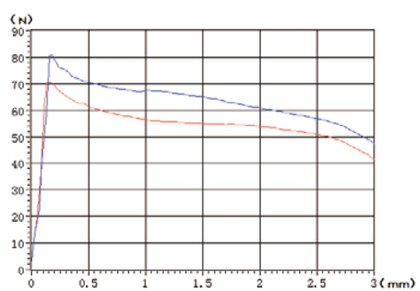

样本数据来源于试验室环境，仅供参考，贵公司如需最新数据或有特殊需求，欢迎联系搏业液压工程师。
The sample data comes from the laboratory environment and is only for reference. If your company needs the latest data or has special needs, please contact Boye hydraulic engineer.

BYZ16-40-01G

直流湿式阀用电磁铁

DC solenoids for hydraulics valves

DC 24V
AC 220V

其它规格可定做
Other can be customized

- 适用于 4 通径液压电磁换向阀
- 螺纹连接，线圈可实现免停机更换
- 配备手动应急装置
- 线圈内孔 ϕ19

- Applicable to 4-way hydraulic solenoid directional valve
- With threaded connection, the coil can be replaced without shutdown
- Equipped with manual emergency device
- Coil inner hole ϕ19

外形及连接尺寸

Outline and connection dimensions

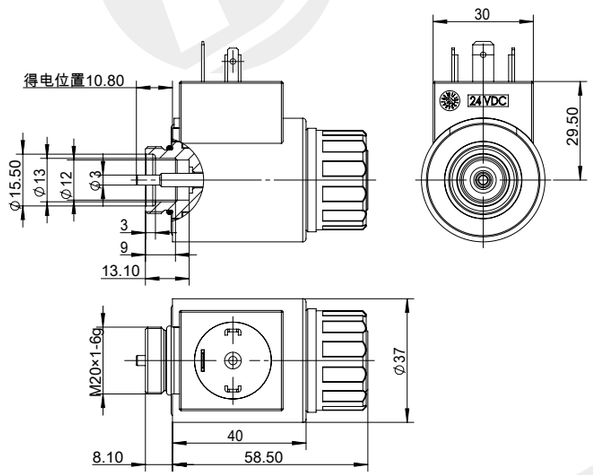

技术参数 /technical parameter		
环境温度 Ambient temperature	℃	-25~50
电压波动范围 Voltage fluctuation range	%	85~110
额定功率 Rated power	W	18
额定行程 Rated stroke	mm	2
全行程 Full stroke	mm	⩾ 4.5
工作油压 Working oil pressure	Mpa	⩽ 21
防护等级 Degree of protection		IP65
操作频率 Operating frequency	T/h	12000
通电持续率 Power on duration	%	100
绝缘等级 Insulation class		H(180)
电气连接方式 Electrical connection mode		DIN43650

注意事项

matters needing attention

1. 线圈不得单独通电使用，有烧损风险！
2. 非防爆线圈，不得使用在有爆炸危险的介质中！
3. 线圈安装后，必须接地可靠，否则有触电危险！

1. The coil shall not be powered on alone, which has the risk of burning!
2. Non explosion-proof coil shall not be used in medium with explosion risk!
3. After the coil is installed, it must be grounded reliably, otherwise there is a risk of electric shock！

力 - 位移特性曲线

F-S characteristic curve

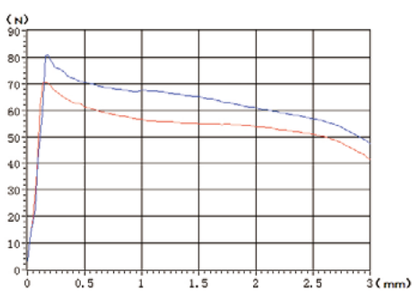

样本数据来源于试验室环境，仅供参考，贵公司如需最新数据或有特殊需求，欢迎联系搏业液压工程师。
The sample data comes from the laboratory environment and is only for reference. If your company needs the latest data or has special needs, please contact Boye hydraulic engineer.

BYZ16-40A-01D

直流湿式阀用电磁铁
DC solenoids for hydraulics valves

DC 12V
DC 24V

其它规格可定做
Other can be customized

- 适用于 4 通径液压电磁换向阀
- 螺纹连接，线圈可实现免停机更换
- 配备手动应急装置
- 线圈内孔 ϕ19

- Applicable to 4-way hydraulic solenoid directional valve
- With threaded connection, the coil can be replaced without shutdown
- Equipped with manual emergency device
- Coil inner hole ϕ19

外形及连接尺寸
Outline and connection dimensions

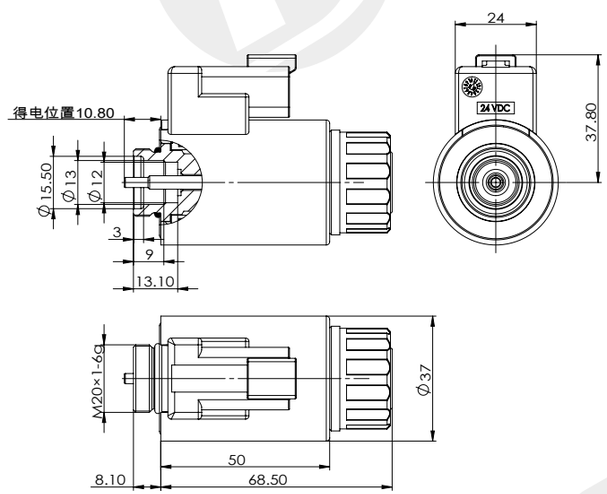

技术参数 /technical parameter		
环境温度 Ambient temperature	℃	-25~50
电压波动范围 Voltage fluctuation range	%	85~110
额定功率 Rated power	W	22
额定行程 Rated stroke	mm	2
全行程 Full stroke	mm	⩾ 4.5
工作油压 Working oil pressure	Mpa	⩽ 21
防护等级 Degree of protection		IP67
操作频率 Operating frequency	T/h	12000
通电持续率 Power on duration	%	100
绝缘等级 Insulation class		H(180)
电气连接方式 Electrical connection mode		DT04-2P

注意事项
matters needing attention

1. 线圈不得单独通电使用，有烧损风险！
2. 非防爆线圈，不得使用在有爆炸危险的介质中！
3. 线圈安装后，必须接地可靠，否则有触电危险！

1. The coil shall not be powered on alone, which has the risk of burning!
2. Non explosion-proof coil shall not be used in medium with explosion risk!
3. After the coil is installed, it must be grounded reliably, otherwise there is a risk of electric shock！

力 - 位移特性曲线
F-S characteristic curve

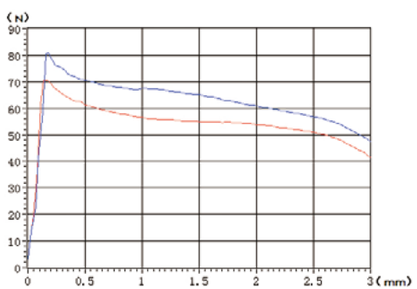

样本数据来源于试验室环境，仅供参考，贵公司如需最新数据或有特殊需求，欢迎联系搏业液压工程师。
The sample data comes from the laboratory environment and is only for reference. If your company needs the latest data or has special needs, please contact Boye hydraulic engineer.

BYZ16-40A-01G

直流湿式阀用电磁铁
DC solenoids for hydraulics valves

DC 24V
AC 220V

其它规格可定做
Other can be customized

- 适用于 4 通径液压电磁换向阀
- 螺纹连接，线圈可实现免停机更换
- 配备手动应急装置
- 线圈内孔 ϕ19

- Applicable to 4-way hydraulic solenoid directional valve
- With threaded connection, the coil can be replaced without shutdown
- Equipped with manual emergency device
- Coil inner hole ϕ19

外形及连接尺寸
Outline and connection dimensions

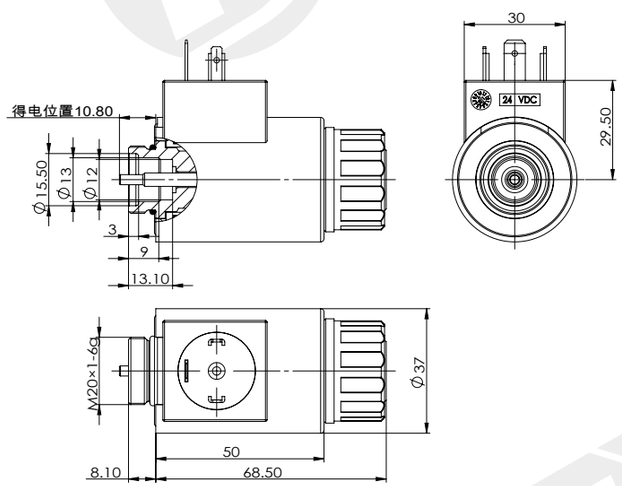

技术参数 /technical parameter		
环境温度 Ambient temperature	℃	-25~50
电压波动范围 Voltage fluctuation range	%	85~110
额定功率 Rated power	W	22
额定行程 Rated stroke	mm	2
全行程 Full stroke	mm	⩾ 4.5
工作油压 Working oil pressure	Mpa	⩽ 21
防护等级 Degree of protection		IP65
操作频率 Operating frequency	T/h	12000
通电持续率 Power on duration	%	100
绝缘等级 Insulation class		H(180)
电气连接方式 Electrical connection mode		DIN43650

注意事项
matters needing attention

1. 线圈不得单独通电使用，有烧损风险！
2. 非防爆线圈，不得使用在有爆炸危险的介质中！
3. 线圈安装后，必须接地可靠，否则有触电危险！

1. The coil shall not be powered on alone, which has the risk of burning!
2. Non explosion-proof coil shall not be used in medium with explosion risk!
3. After the coil is installed, it must be grounded reliably, otherwise there is a risk of electric shock！

力 - 位移特性曲线
F-S characteristic curve

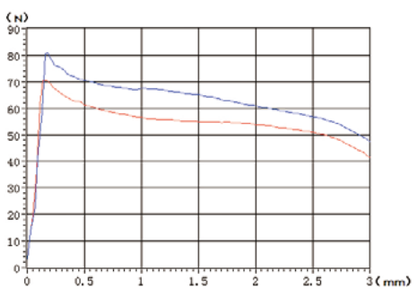

样本数据来源于试验室环境，仅供参考，贵公司如需最新数据或有特殊需求，欢迎联系搏业液压工程师。
The sample data comes from the laboratory environment and is only for reference. If your company needs the latest data or has special needs, please contact Boye hydraulic engineer.

BYZ16-60-01D

直流湿式阀用电磁铁

DC solenoids for hydraulics valves

DC 12V
DC 24V

其它规格可定做
Other can be customized

- 适用于 6 通径液压电磁换向阀
- 螺纹连接，线圈可实现免停机更换
- 配备手动应急装置
- 线圈内孔 ϕ23

- Applicable to 6-way hydraulic solenoid directional valve
- With threaded connection, the coil can be replaced without shutdown
- Equipped with manual emergency device
- Coil inner hole ϕ23

外形及连接尺寸

Outline and connection dimensions

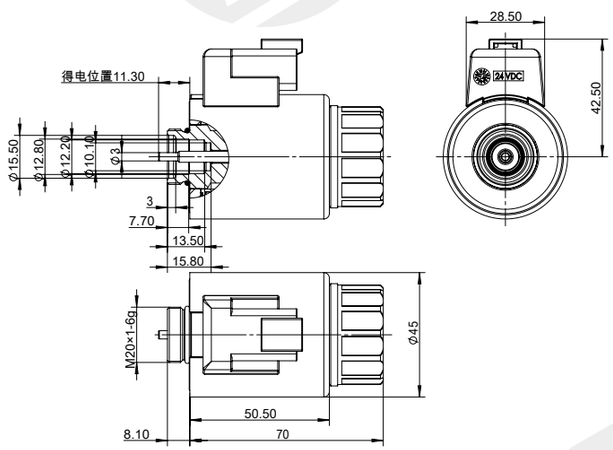

技术参数 /technical parameter		
环境温度 Ambient temperature	℃	-25~50
电压波动范围 Voltage fluctuation range	%	85~110
额定功率 Rated power	W	30
额定行程 Rated stroke	mm	2.5
全行程 Full stroke	mm	⩾ 5.5
工作油压 Working oil pressure	Mpa	⩽ 24
防护等级 Degree of protection		IP67
操作频率 Operating frequency	T/h	12000
通电持续率 Power on duration	%	100
绝缘等级 Insulation class		H(180)
电气连接方式 Electrical connection mode		DT04-2P

注意事项

matters needing attention

1. 线圈不得单独通电使用，有烧损风险！
2. 非防爆线圈，不得使用在有爆炸危险的介质中！
3. 线圈安装后，必须接地可靠，否则有触电危险！

1. The coil shall not be powered on alone, which has the risk of burning!
2. Non explosion-proof coil shall not be used in medium with explosion risk!
3. After the coil is installed, it must be grounded reliably, otherwise there is a risk of electric shock！

力 - 位移特性曲线

F-S characteristic curve

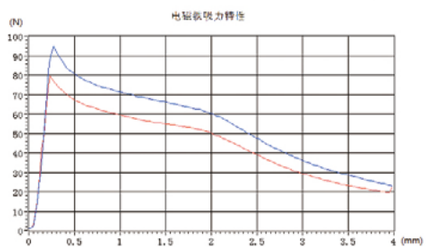

样本数据来源于试验室环境，仅供参考，贵公司如需最新数据或有特殊需求，欢迎联系搏业液压工程师。
The sample data comes from the laboratory environment and is only for reference. If your company needs the latest data or has special needs, please contact Boye hydraulic engineer.

BYZ16-60-01G

直流湿式阀用电磁铁

DC solenoids for hydraulics valves

DC 24V
AC 220V

其它规格可定做
Other can be customized

- 适用于 6 通径液压电磁换向阀
- 螺纹连接，线圈可实现免停机更换
- 配备手动应急装置
- 线圈内孔 ϕ23

- Applicable to 6-way hydraulic solenoid directional valve
- With threaded connection, the coil can be replaced without shutdown
- Equipped with manual emergency device
- Coil inner hole ϕ23

外形及连接尺寸

Outline and connection dimensions

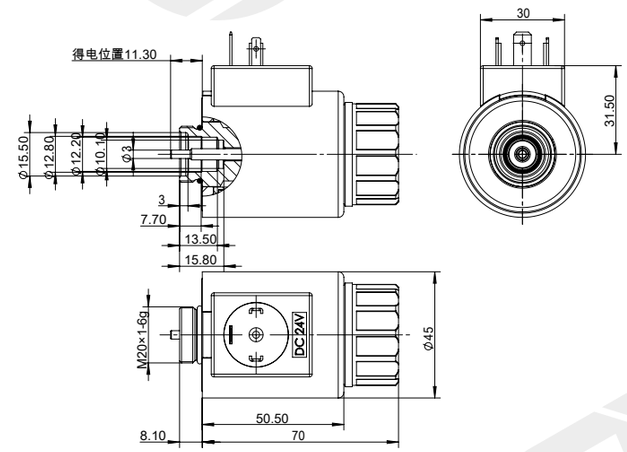

技术参数 /technical parameter		
环境温度 Ambient temperature	℃	-25~50
电压波动范围 Voltage fluctuation range	%	85~110
额定功率 Rated power	W	30
额定行程 Rated stroke	mm	2.5
全行程 Full stroke	mm	⩾ 5.5
工作油压 Working oil pressure	Mpa	⩽ 24
防护等级 Degree of protection		IP65
操作频率 Operating frequency	T/h	12000
通电持续率 Power on duration	%	100
绝缘等级 Insulation class		H(180)
电气连接方式 Electrical connection mode		DIN43650

注意事项

matters needing attention

1. 线圈不得单独通电使用，有烧损风险！
2. 非防爆线圈，不得使用在有爆炸危险的介质中！
3. 线圈安装后，必须接地可靠，否则有触电危险！

1. The coil shall not be powered on alone, which has the risk of burning!
2. Non explosion-proof coil shall not be used in medium with explosion risk!
3. After the coil is installed, it must be grounded reliably, otherwise there is a risk of electric shock！

力 - 位移特性曲线

F-S characteristic curve

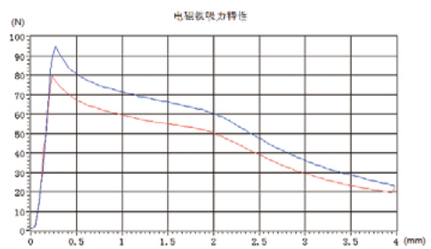

样本数据来源于试验室环境，仅供参考，贵公司如需最新数据或有特殊需求，欢迎联系搏业液压工程师。
The sample data comes from the laboratory environment and is only for reference. If your company needs the latest data or has special needs, please contact Boye hydraulic engineer.

BYZ16-90-01D

直流湿式阀用电磁铁

DC solenoids for hydraulics valves

DC 12V
DC 24V

其它规格可定做
Other can be customized

- 适用于 10 通径液压电磁换向阀
- 螺纹连接，线圈可实现免停机更换
- 配备手动应急装置
- 线圈内孔 ϕ31

- Applicable to 10-way hydraulic solenoid directional valve
- With threaded connection, the coil can be replaced without shutdown
- Equipped with manual emergency device
- Coil inner hole ϕ31

外形及连接尺寸

Outline and connection dimensions

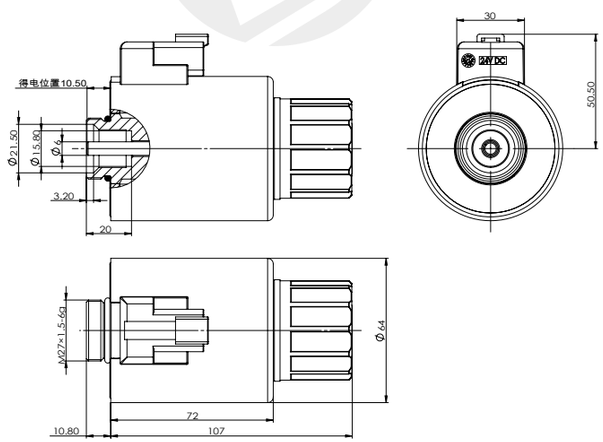

技术参数 /technical parameter		
环境温度 Ambient temperature	℃	-25~50
电压波动范围 Voltage fluctuation range	%	85~110
额定功率 Rated power	W	40
额定行程 Rated stroke	mm	4
全行程 Full stroke	mm	⩾ 8.5
工作油压 Working oil pressure	Mpa	⩽ 21
防护等级 Degree of protection		IP67
操作频率 Operating frequency	T/h	12000
通电持续率 Power on duration	%	100
绝缘等级 Insulation class		H(180)
电气连接方式 Electrical connection mode		DT04-2P

注意事项

matters needing attention

1. 线圈不得单独通电使用，有烧损风险！
2. 非防爆线圈，不得使用在有爆炸危险的介质中！
3. 线圈安装后，必须接地可靠，否则有触电危险！

1. The coil shall not be powered on alone, which has the risk of burning!
2. Non explosion-proof coil shall not be used in medium with explosion risk!
3. After the coil is installed, it must be grounded reliably, otherwise there is a risk of electric shock！

力 - 位移特性曲线

F-S characteristic curve

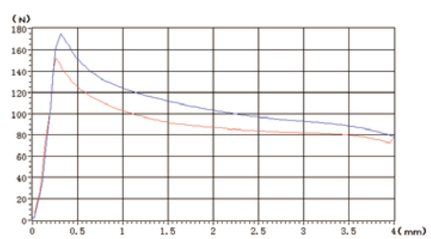

样本数据来源于试验室环境，仅供参考，贵公司如需最新数据或有特殊需求，欢迎联系搏业液压工程师。
The sample data comes from the laboratory environment and is only for reference. If your company needs the latest data or has special needs, please contact Boye hydraulic engineer.

BYZ16-90-01G

直流湿式阀用电磁铁

DC solenoids for hydraulics valves

DC 24V
AC 220V

其它规格可定做
Other can be customized

- 适用于 10 通径液压电磁换向阀
- 螺纹连接，线圈可实现免停机更换
- 配备手动应急装置
- 线圈内孔 ϕ31

- Applicable to 10-way hydraulic solenoid directional valve
- With threaded connection, the coil can be replaced without shutdown
- Equipped with manual emergency device
- Coil inner hole ϕ31

外形及连接尺寸

Outline and connection dimensions

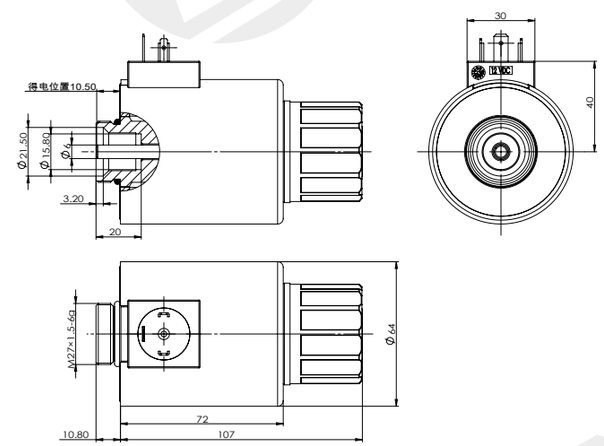

技术参数 /technical parameter		
环境温度 Ambient temperature	℃	-25~50
电压波动范围 Voltage fluctuation range	%	85~110
额定功率 Rated power	W	40
额定行程 Rated stroke	mm	4
全行程 Full stroke	mm	⩾ 8.5
工作油压 Working oil pressure	Mpa	⩽ 21
防护等级 Degree of protection		IP65
操作频率 Operating frequency	T/h	12000
通电持续率 Power on duration	%	100
绝缘等级 Insulation class		H(180)
电气连接方式 Electrical connection mode		DIN43650

注意事项

matters needing attention

1. 线圈不得单独通电使用，有烧损风险！
2. 非防爆线圈，不得使用在有爆炸危险的介质中！
3. 线圈安装后，必须接地可靠，否则有触电危险！

1. The coil shall not be powered on alone, which has the risk of burning!
2. Non explosion-proof coil shall not be used in medium with explosion risk!
3. After the coil is installed, it must be grounded reliably, otherwise there is a risk of electric shock！

力 - 位移特性曲线

F-S characteristic curve

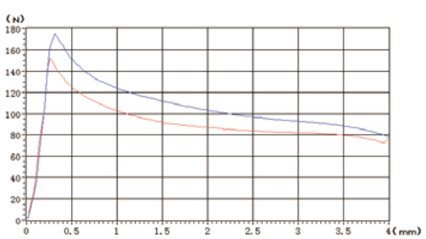

样本数据来源于试验室环境，仅供参考，贵公司如需最新数据或有特殊需求，欢迎联系搏业液压工程师。
The sample data comes from the laboratory environment and is only for reference. If your company needs the latest data or has special needs, please contact Boye hydraulic engineer.

BYZ08-30-01G

直流湿式阀用电磁铁

DC solenoids for hydraulics valves

DC 24V
AC 220V

其它规格可定做
Other can be customized

- 适用于 5 通径液压电磁换向阀
- 螺纹连接，线圈可实现免停机更换
- 配备手动应急装置
- 线圈内孔 ϕ16

- Applicable to 5-way hydraulic solenoid directional valve
- With threaded connection, the coil can be replaced without shutdown
- Equipped with manual emergency device
- Coil inner hole ϕ16

外形及连接尺寸

Outline and connection dimensions

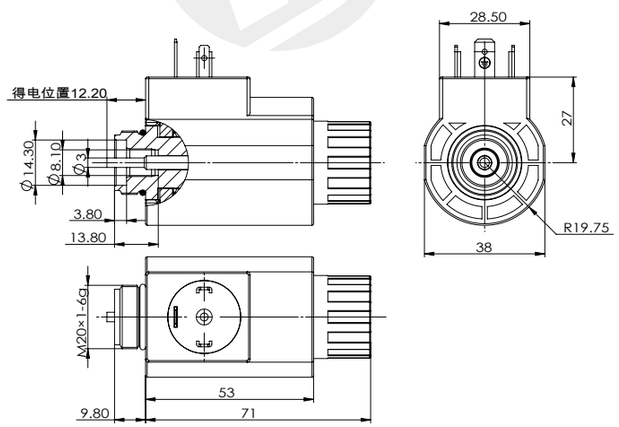

技术参数 /technical parameter		
环境温度 Ambient temperature	℃	-25~50
电压波动范围 Voltage fluctuation range	%	85~110
额定功率 Rated power	W	25
额定行程 Rated stroke	mm	2.8
全行程 Full stroke	mm	⩾ 6.1
工作油压 Working oil pressure	Mpa	⩽ 21
防护等级 Degree of protection		IP65
操作频率 Operating frequency	T/h	12000
通电持续率 Power on duration	%	100
绝缘等级 Insulation class		H(180)
电气连接方式 Electrical connection mode		DIN43650

注意事项

matters needing attention

1. 线圈不得单独通电使用，有烧损风险！
2. 非防爆线圈，不得使用在有爆炸危险的介质中！
3. 线圈安装后，必须接地可靠，否则有触电危险！

1. The coil shall not be powered on alone, which has the risk of burning!
2. Non explosion-proof coil shall not be used in medium with explosion risk!
3. After the coil is installed, it must be grounded reliably, otherwise there is a risk of electric shock！

力 - 位移特性曲线

F-S characteristic curve

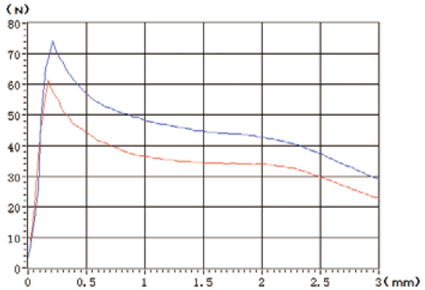

样本数据来源于试验室环境，仅供参考，贵公司如需最新数据或有特殊需求，欢迎联系搏业液压工程师。
The sample data comes from the laboratory environment and is only for reference. If your company needs the latest data or has special needs, please contact Boye hydraulic engineer.

BYZ04-25-01D

直流湿式阀用电磁铁

DC solenoids for hydraulics valves

DC 12V
DC 24V

其它规格可定做
Other can be customized

- 适应于液压电磁换向阀
- 螺纹连接，线圈可实现免停机更换
- 配备手动应急装置
- 线圈内孔 ϕ25

- Applicable to hydraulic solenoid directional valve
- With threaded connection, the coil can be replaced without shutdown
- Equipped with manual emergency device
- Coil inner hole ϕ 25

外形及连接尺寸

Outline and connection dimensions

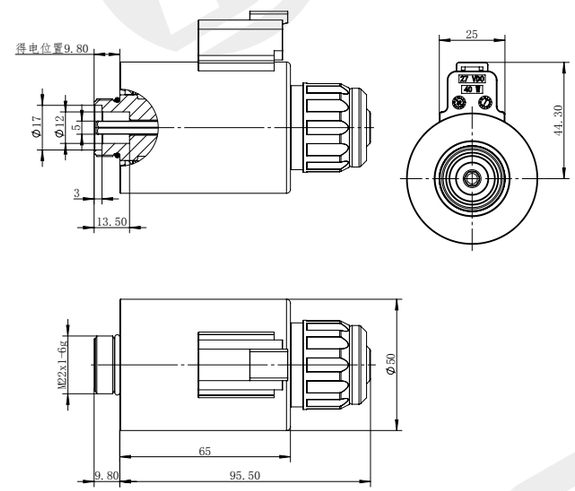

技术参数 /technical parameter		
环境温度 Ambient temperature	℃	-25~50
电压波动范围 Voltage fluctuation range	%	85~110
额定功率 Rated power	W	40
额定行程 Rated stroke	mm	3
全行程 Full stroke	mm	⩾ 6.8
工作油压 Working oil pressure	Mpa	⩽ 21
防护等级 Degree of protection		IP67
操作频率 Operating frequency	T/h	12000
通电持续率 Power on duration	%	100
绝缘等级 Insulation class		H(180)
电气连接方式 Electrical connection mode		DT04-2P

注意事项

matters needing attention

1. 线圈不得单独通电使用，有烧损风险！
2. 非防爆线圈，不得使用在有爆炸危险的介质中！
3. 线圈安装后，必须接地可靠，否则有触电危险！

1. The coil shall not be powered on alone, which has the risk of burning!
2. Non explosion-proof coil shall not be used in medium with explosion risk!
3. After the coil is installed, it must be grounded reliably, otherwise there is a risk of electric shock！

力 - 位移特性曲线

F-S characteristic curve

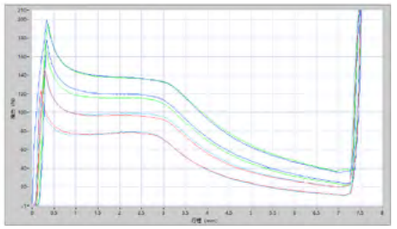

样本数据来源于试验室环境，仅供参考，贵公司如需最新数据或有特殊需求，欢迎联系搏业液压工程师。
The sample data comes from the laboratory environment and is only for reference. If your company needs the latest data or has special needs, please contact Boye hydraulic engineer.

BYZ02-3C-01G

直流湿式阀用电磁铁

DC solenoids for hydraulics valves

DC 24V
AC 220V

其它规格可定做
Other can be customized

- 适用于电磁球阀
- 螺钉连接
- 配备手动应急装置

- Applicable to electromagnetic ball valve
- Screw connection
- Equipped with manual emergency device

外形及连接尺寸

Outline and connection dimensions

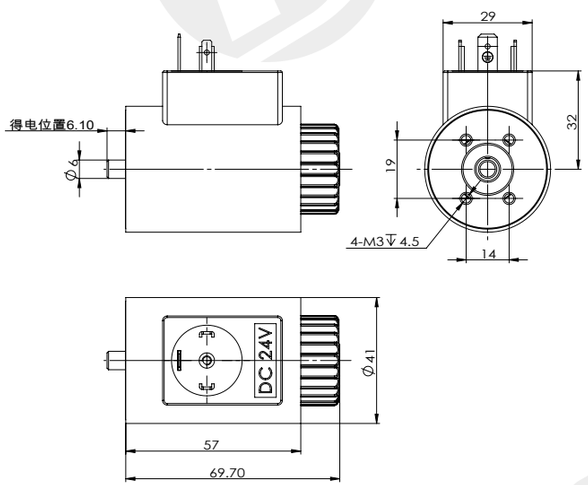

技术参数 /technical parameter		
环境温度 Ambient temperature	℃	-10~40
电压波动范围 Voltage fluctuation range	%	85~110
额定功率 Rated power	W	30
额定行程 Rated stroke	mm	3
全行程 Full stroke	mm	⩾ 3.5
工作油压 Working oil pressure	Mpa	— —
防护等级 Degree of protection		IP65
操作频率 Operating frequency	T/h	12000
通电持续率 Power on duration	%	100
绝缘等级 Insulation class		F(155)
电气连接方式 Electrical connection mode		DIN43650

注意事项

matters needing attention

1. 线圈不得单独通电使用，有烧损风险！
2. 非防爆线圈，不得使用在有爆炸危险的介质中！
3. 线圈安装后，必须接地可靠，否则有触电危险！

1. The coil shall not be powered on alone, which has the risk of burning!
2. Non explosion-proof coil shall not be used in medium with explosion risk!
3. After the coil is installed, it must be grounded reliably, otherwise there is a risk of electric shock！

力 - 位移特性曲线

F-S characteristic curve

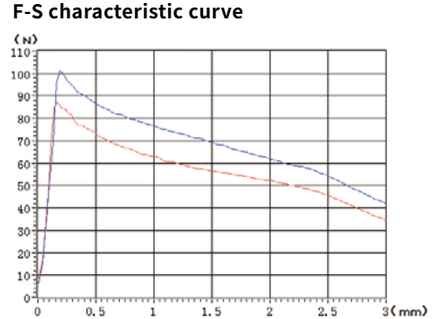

样本数据来源于试验室环境，仅供参考，贵公司如需最新数据或有特殊需求，欢迎联系搏业液压工程师。
The sample data comes from the laboratory environment and is only for reference. If your company needs the latest data or has special needs, please contact Boye hydraulic engineer.

BYZ02-55-01G

直流湿式阀用电磁铁

DC solenoids for hydraulics valves

DC 24V
AC 220V

其它规格可定做
Other can be customized

- 适用于电磁球阀
- 螺钉连接
- 配备手动应急装置

- Applicable to electromagnetic ball valve
- Screw connection
- Equipped with manual emergency device

外形及连接尺寸

Outline and connection dimensions

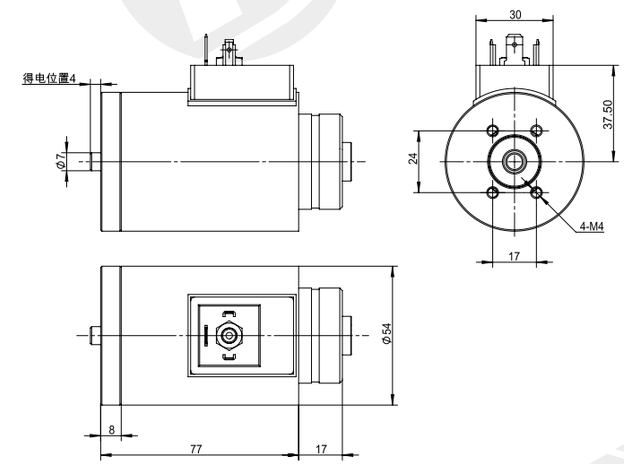

技术参数 /technical parameter		
环境温度 Ambient temperature	℃	-10~40
电压波动范围 Voltage fluctuation range	%	85~110
额定功率 Rated power	W	30
额定行程 Rated stroke	mm	4
全行程 Full stroke	mm	⩾ 8.5
工作油压 Working oil pressure	Mpa	⩽ 10
防护等级 Degree of protection		IP65
操作频率 Operating frequency	T/h	12000
通电持续率 Power on duration	%	100
绝缘等级 Insulation class		H(180)
电气连接方式 Electrical connection mode		DIN43650

注意事项

matters needing attention

1. 线圈不得单独通电使用，有烧损风险！
2. 非防爆线圈，不得使用在有爆炸危险的介质中！
3. 线圈安装后，必须接地可靠，否则有触电危险！

1. The coil shall not be powered on alone, which has the risk of burning!
2. Non explosion-proof coil shall not be used in medium with explosion risk!
3. After the coil is installed, it must be grounded reliably, otherwise there is a risk of electric shock！

力 - 位移特性曲线

F-S characteristic curve

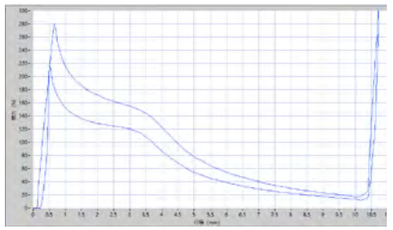

样本数据来源于试验室环境，仅供参考，贵公司如需最新数据或有特殊需求，欢迎联系搏业液压工程师。
The sample data comes from the laboratory environment and is only for reference. If your company needs the latest data or has special needs, please contact Boye hydraulic engineer.

BYZ03-13-01MG

直流湿式阀用电磁铁
DC solenoids for hydraulics valves

DC 24V
AC 220V

其它规格可定做
Other can be customized

- 适用于液压电磁换向阀
- 螺纹连接，线圈可实现免停机更换
- 配备手动应急装置
- 线圈内孔 ϕ13

- Applicable to hydraulic solenoid directional valve
- With threaded connection, the coil can be replaced without shutdown
- Equipped with manual emergency device
- Coil inner hole ϕ13

外形及连接尺寸
Outline and connection dimensions

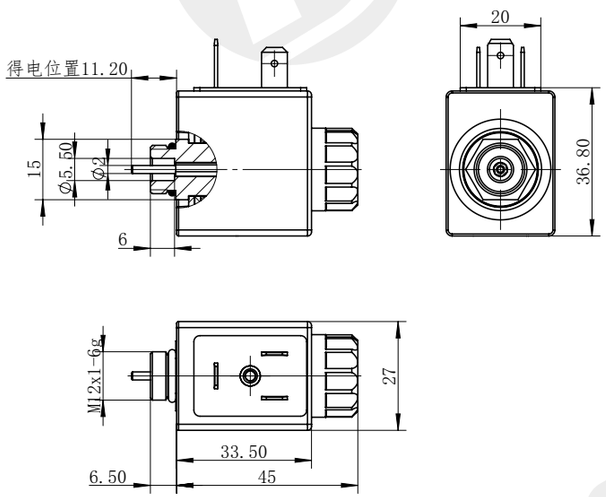

技术参数 /technical parameter		
环境温度 Ambient temperature	℃	-25~50
电压波动范围 Voltage fluctuation range	%	85~110
额定功率 Rated power	W	25
额定行程 Rated stroke	mm	1.5
全行程 Full stroke	mm	⩾ 3
工作油压 Working oil pressure	Mpa	⩽ 21
防护等级 Degree of protection		IP65
操作频率 Operating frequency	T/h	12000
通电持续率 Power on duration	%	100
绝缘等级 Insulation class		H(180)
电气连接方式 Electrical connection mode		DIN43650

注意事项
matters needing attention

1. 线圈不得单独通电使用，有烧损风险！
2. 非防爆线圈，不得使用在有爆炸危险的介质中！
3. 线圈安装后，必须接地可靠，否则有触电危险！

1. The coil shall not be powered on alone, which has the risk of burning!
2. Non explosion-proof coil shall not be used in medium with explosion risk!
3. After the coil is installed, it must be grounded reliably, otherwise there is a risk of electric shock！

力 - 位移特性曲线
F-S characteristic curve

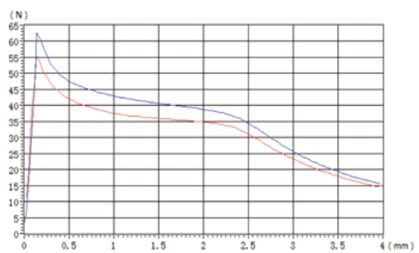

样本数据来源于试验室环境，仅供参考，贵公司如需最新数据或有特殊需求，欢迎联系搏业液压工程师。
The sample data comes from the laboratory environment and is only for reference. If your company needs the latest data or has special needs, please contact Boye hydraulic engineer.

BYZ03-16-01MG

直流湿式阀用电磁铁
DC solenoids for hydraulics valves

DC 24V
AC 220V

其它规格可定做
Other can be customized

- 适应于液压电磁换向阀
- 螺纹连接，线圈可实现免停机更换
- 配备手动应急装置
- 线圈内孔 ϕ16

- Applicable to hydraulic solenoid directional valve
- With threaded connection, the coil can be replaced without shutdown
- Equipped with manual emergency device
- Coil inner hole ϕ 16

外形及连接尺寸
Outline and connection dimensions

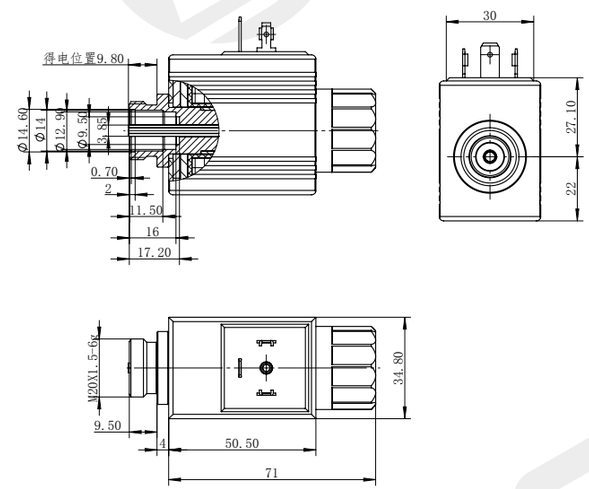

技术参数 /technical parameter		
环境温度 Ambient temperature	℃	-25~50
电压波动范围 Voltage fluctuation range	%	85~110
额定功率 Rated power	W	36
额定行程 Rated stroke	mm	2.5
全行程 Full stroke	mm	⩾ 5
工作油压 Working oil pressure	Mpa	⩽ 21
防护等级 Degree of protection		IP65
操作频率 Operating frequency	T/h	12000
通电持续率 Power on duration	%	100
绝缘等级 Insulation class		H(180)
电气连接方式 Electrical connection mode		DIN43650

注意事项
matters needing attention

1. 线圈不得单独通电使用，有烧损风险！
2. 非防爆线圈，不得使用在有爆炸危险的介质中！
3. 线圈安装后，必须接地可靠，否则有触电危险！

1. The coil shall not be powered on alone, which has the risk of burning!
2. Non explosion-proof coil shall not be used in medium with explosion risk!
3. After the coil is installed, it must be grounded reliably, otherwise there is a risk of electric shock！

力 - 位移特性曲线
F-S characteristic curve

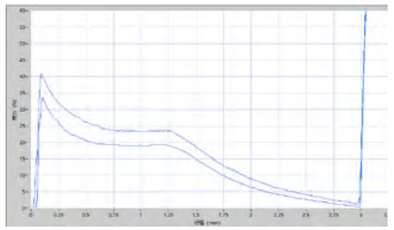

样本数据来源于试验室环境，仅供参考，贵公司如需最新数据或有特殊需求，欢迎联系搏业液压工程师。
The sample data comes from the laboratory environment and is only for reference. If your company needs the latest data or has special needs, please contact Boye hydraulic engineer.

BYJ 交流湿式阀用电磁铁

AC SOLENOIDS FOR HYDRAULICS VALVES

- 搏业液压，BYJ 交流湿式阀用电磁铁，作为液压电磁阀关键电磁驱动元件，广泛应用于自动化控制系统中。
- 技术标准严格按照 JBT5244/VDE0580 设计生产。
- 采用优质导磁材料，输出力大保证电磁阀工作稳定可靠。
- 提供多种标准连接方式，外壳防护等级 IP65，可满足不同领域环境需要。
- 采用高质量 H 级漆包线和绝缘材料，全塑封线圈结构，坚固耐用，散热快，即使长期使用也不会烧损。
- 导磁套工作压力≤ 21MPa，极限压力≥ 31.5MPa，爆破压力≥ 63MPa
- 机械寿命＞ 1000 万次，脉冲疲劳寿命＞ 200 万次
- 标准产品若不能满足您的需求时，可联系我公司，若有其他特殊要求可定制，欢迎咨询。

- Boye hydraulic, BYJ series AC wet valve electromagnet, as the key electromagnetic driving element of hydraulic solenoid valve, is widely used in automatic control system.
- The technical standard is designed and produced in strict accordance with JBT5244 / VDE0580.
- It adopts high-quality magnetic conducting material with large output force to ensure the stable and reliable operation of the solenoid valve.
- A variety of standard connection modes are provided, and the enclosure protection grade is IP65, which can meet the environmental needs of different fields.
- It adopts high-quality H-class enamelled wire and insulating material, and fully plastic sealed coil structure, which is firm and durable, fast heat dissipation, and will not burn even if it is used for a long time.
- Working pressure of magnetic guide sleeve ≤ 21MPa, limit pressure ≥ 31.5Mpa, burst pressure ≥63Mpa
- Mechanical life > 10 million times, pulse fatigue life > 2 million times
- If the standard products can not meet your needs, you can contact our company. If there are other special requirements, you can customize them. Welcome to consult.

BYJ09-27-01G

交流湿式阀用电磁铁
AC solenoids for hydraulics valves

AC 110V 50HZ
AC 220V 50HZ

其它规格可定做
Other can be customized

- 适用于 6 通径液压电磁换向阀
- 螺纹连接，线圈可实现免停机更换
- 配备手动应急装置
- 线圈内孔 ϕ22
- 采用 BMC 热固性塑料封装

- Applicable to 6-way hydraulic solenoid directional valve
- With threaded connection, the coil can be replaced without shutdown
- Equipped with manual emergency device
- Coil inner hole ϕ22
- Encapsulated in BMC thermosetting plastic

外形及连接尺寸
Outline and connection dimensions

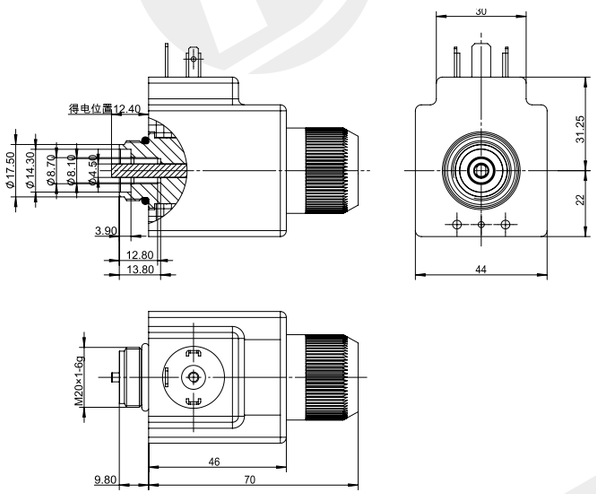

技术参数 /technical parameter		
环境温度 Ambient temperature	℃	-10~40
电压波动范围 Voltage fluctuation range	%	85~110
额定功率 Rated power	W	30
额定行程 Rated stroke	mm	3
全行程 Full stroke	mm	⩾ 6.1
工作油压 Working oil pressure	Mpa	⩽ 21
防护等级 Degree of protection		IP65
操作频率 Operating frequency	T/h	12000
通电持续率 Power on duration	%	100
绝缘等级 Insulation class		H(180)
电气连接方式 Electrical connection mode		DIN43650

注意事项
matters needing attention

1. 线圈不得单独通电使用，有烧损风险！
2. 非防爆线圈，不得使用在有爆炸危险的介质中！
3. 线圈安装后，必须接地可靠，否则有触电危险！

1. The coil shall not be powered on alone, which has the risk of burning!
2. Non explosion-proof coil shall not be used in medium with explosion risk!
3. After the coil is installed, it must be grounded reliably, otherwise there is a risk of electric shock！

力 - 位移特性曲线
F-S characteristic curve

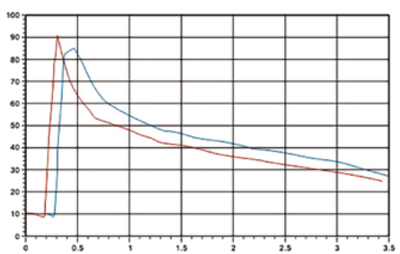

样本数据来源于试验室环境，仅供参考，贵公司如需最新数据或有特殊需求，欢迎联系搏业液压工程师。
The sample data comes from the laboratory environment and is only for reference. If your company needs the latest data or has special needs, please contact Boye hydraulic engineer.

BYJ09-54-01G

交流湿式阀用电磁铁
AC solenoids for hydraulics valves

AC 110V 50HZ
AC 220V 50HZ

其它规格可定做
Other can be customized

- 适用于 6 通径液压电磁换向阀
- 螺纹连接，线圈可实现免停机更换
- 配备手动应急装置
- 线圈内孔 ϕ26
- 采用 BMC 热固性塑料封装

- Applicable to 6-way hydraulic solenoid directional valve
- With threaded connection, the coil can be replaced without shutdown
- Equipped with manual emergency device
- Coil inner hole ϕ26
- Encapsulated in BMC thermosetting plastic

外形及连接尺寸
Outline and connection dimensions

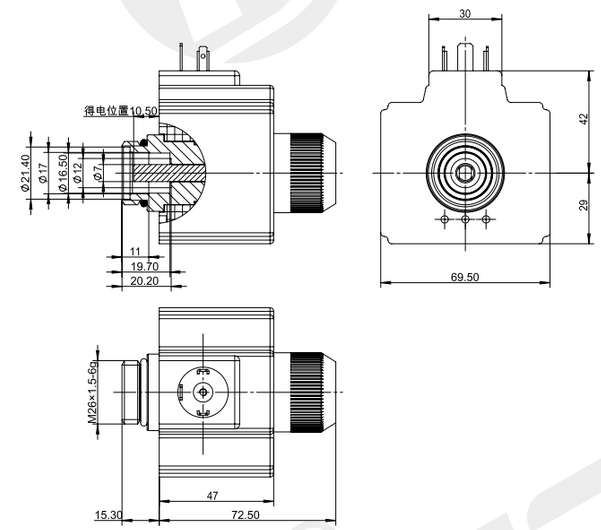

技术参数 /technical parameter		
环境温度 Ambient temperature	℃	-10~40
电压波动范围 Voltage fluctuation range	%	85~110
额定功率 Rated power	W	38
额定行程 Rated stroke	mm	4
全行程 Full stroke	mm	⩾ 8.5
工作油压 Working oil pressure	Mpa	⩽ 21
防护等级 Degree of protection		IP65
操作频率 Operating frequency	T/h	12000
通电持续率 Power on duration	%	100
绝缘等级 Insulation class		H(180)
电气连接方式 Electrical connection mode		DIN43650

注意事项
matters needing attention

1. 线圈不得单独通电使用，有烧损风险！
2. 非防爆线圈，不得使用在有爆炸危险的介质中！
3. 线圈安装后，必须接地可靠，否则有触电危险！

1. The coil shall not be powered on alone, which has the risk of burning!
2. Non explosion-proof coil shall not be used in medium with explosion risk!
3. After the coil is installed, it must be grounded reliably, otherwise there is a risk of electric shock！

力 - 位移特性曲线
F-S characteristic curve

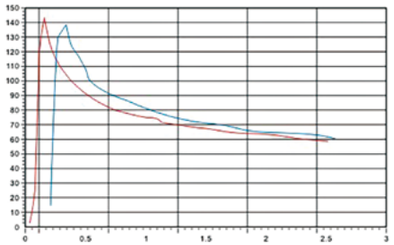

样本数据来源于试验室环境，仅供参考，贵公司如需最新数据或有特殊需求，欢迎联系搏业液压工程师。
The sample data comes from the laboratory environment and is only for reference. If your company needs the latest data or has special needs, please contact Boye hydraulic engineer.

BYJ11-27-01A

交流湿式阀用电磁铁
AC solenoids for hydraulics valves

AC 110V 50HZ
AC 220V 50HZ

其它规格可定做
Other can be customized

- 适用于 6 通径液压电磁换向阀
- 螺纹连接，线圈可实现免停机更换
- 配备手动应急装置
- 线圈内孔 ϕ20
- 采用 BMC 热固性塑料封装

- Applicable to 6-way hydraulic solenoid directional valve
- With threaded connection, the coil can be replaced without shutdown
- Equipped with manual emergency device
- Coil inner hole ϕ20
- Encapsulated in BMC thermosetting plastic

外形及连接尺寸
Outline and connection dimensions

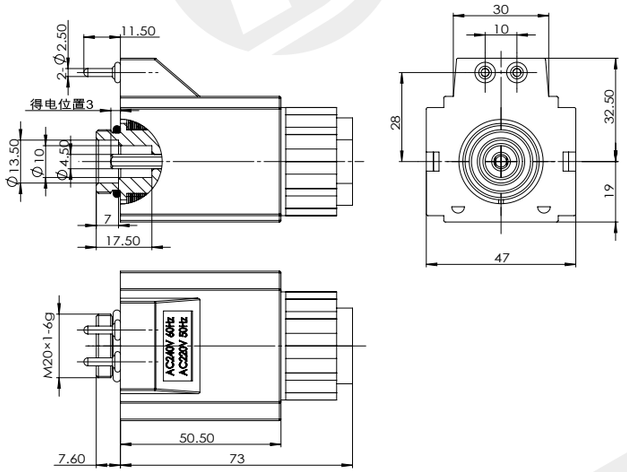

技术参数 /technical parameter		
环境温度 Ambient temperature	℃	-10~40
电压波动范围 Voltage fluctuation range	%	85~110
额定功率 Rated power	W	30
额定行程 Rated stroke	mm	3
全行程 Full stroke	mm	⩾ 6.5
工作油压 Working oil pressure	Mpa	⩽ 21
防护等级 Degree of protection		IP65
操作频率 Operating frequency	T/h	12000
通电持续率 Power on duration	%	100
绝缘等级 Insulation class		H(180)
电气连接方式 Electrical connection mode		接线盒式

注意事项
matters needing attention

1. 线圈不得单独通电使用，有烧损风险！
2. 非防爆线圈，不得使用在有爆炸危险的介质中！
3. 线圈安装后，必须接地可靠，否则有触电危险！

1. The coil shall not be powered on alone, which has the risk of burning!
2. Non explosion-proof coil shall not be used in medium with explosion risk!
3. After the coil is installed, it must be grounded reliably, otherwise there is a risk of electric shock！

力 - 位移特性曲线
F-S characteristic curve

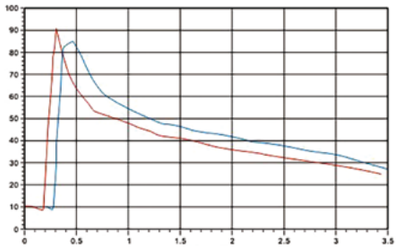

样本数据来源于试验室环境，仅供参考，贵公司如需最新数据或有特殊需求，欢迎联系搏业液压工程师。
The sample data comes from the laboratory environment and is only for reference. If your company needs the latest data or has special needs, please contact Boye hydraulic engineer.

BYJ11-27-01G

交流湿式阀用电磁铁
AC solenoids for hydraulics valves

AC 110V 50HZ
AC 220V 50HZ

其它规格可定做
Other can be customized

- 适用于 6 通径液压电磁换向阀
- 螺纹连接，线圈可实现免停机更换
- 配备手动应急装置
- 线圈内孔 ϕ20
- 采用 BMC 热固性塑料封装

- Applicable to 6-way hydraulic solenoid directional valve
- With threaded connection, the coil can be replaced without shutdown
- Equipped with manual emergency device
- Coil inner hole ϕ20
- Encapsulated in BMC thermosetting plastic

外形及连接尺寸
Outline and connection dimensions

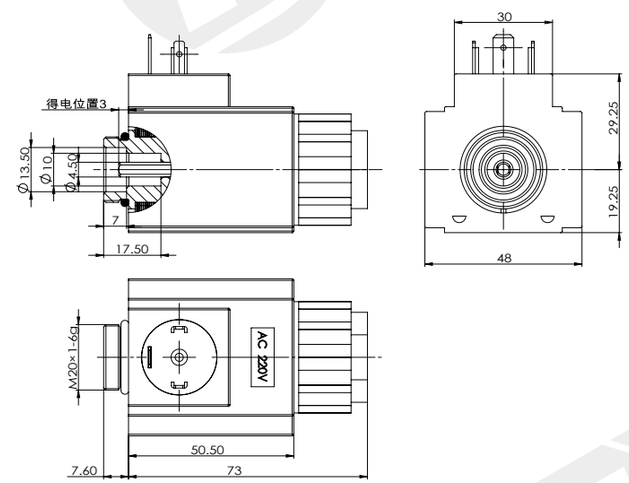

技术参数 /technical parameter		
环境温度 Ambient temperature	℃	-10~40
电压波动范围 Voltage fluctuation range	%	85~110
额定功率 Rated power	W	30
额定行程 Rated stroke	mm	3
全行程 Full stroke	mm	⩾ 6.5
工作油压 Working oil pressure	Mpa	⩽ 21
防护等级 Degree of protection		IP65
操作频率 Operating frequency	T/h	12000
通电持续率 Power on duration	%	100
绝缘等级 Insulation class		H(180)
电气连接方式 Electrical connection mode		DIN43650

注意事项
matters needing attention

1. 线圈不得单独通电使用，有烧损风险！
2. 非防爆线圈，不得使用在有爆炸危险的介质中！
3. 线圈安装后，必须接地可靠，否则有触电危险！

1. The coil shall not be powered on alone, which has the risk of burning!
2. Non explosion-proof coil shall not be used in medium with explosion risk!
3. After the coil is installed, it must be grounded reliably, otherwise there is a risk of electric shock！

力 - 位移特性曲线
F-S characteristic curve

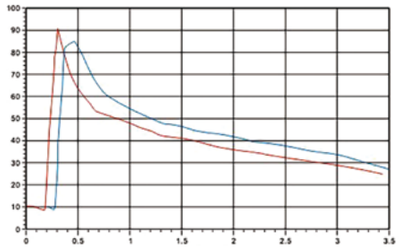

样本数据来源于试验室环境，仅供参考，贵公司如需最新数据或有特殊需求，欢迎联系搏业液压工程师。
The sample data comes from the laboratory environment and is only for reference. If your company needs the latest data or has special needs, please contact Boye hydraulic engineer.

BYJ11-54-01A

交流湿式阀用电磁铁
AC solenoids for hydraulics valves

AC 110V 50HZ
AC 220V 50HZ

其它规格可定做
Other can be customized

- 适用于 10 通径液压电磁换向阀
- 螺纹连接，线圈可实现免停机更换
- 配备手动应急装置
- 线圈内孔 ϕ26
- 采用 BMC 热固性塑料封装

- Applicable to 10-way hydraulic solenoid directional valve
- With threaded connection, the coil can be replaced without shutdown
- Equipped with manual emergency device
- Coil inner hole ϕ26
- Encapsulated in BMC thermosetting plastic

外形及连接尺寸
Outline and connection dimensions

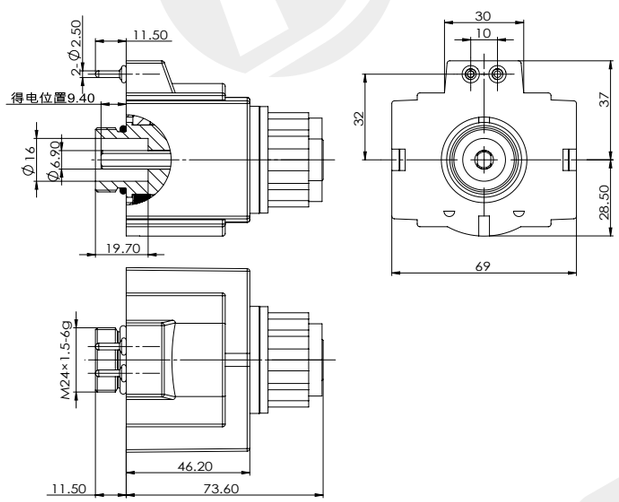

技术参数 /technical parameter		
环境温度 Ambient temperature	℃	-10~40
电压波动范围 Voltage fluctuation range	%	85~110
额定功率 Rated power	W	38
额定行程 Rated stroke	mm	4
全行程 Full stroke	mm	⩾ 8.5
工作油压 Working oil pressure	Mpa	⩽ 21
防护等级 Degree of protection		IP65
操作频率 Operating frequency	T/h	12000
通电持续率 Power on duration	%	100
绝缘等级 Insulation class		H(180)
电气连接方式 Electrical connection mode		接线盒式

注意事项
matters needing attention

1. 线圈不得单独通电使用，有烧损风险！
2. 非防爆线圈，不得使用在有爆炸危险的介质中！
3. 线圈安装后，必须接地可靠，否则有触电危险！

1. The coil shall not be powered on alone, which has the risk of burning!
2. Non explosion-proof coil shall not be used in medium with explosion risk!
3. After the coil is installed, it must be grounded reliably, otherwise there is a risk of electric shock！

力 - 位移特性曲线
F-S characteristic curve

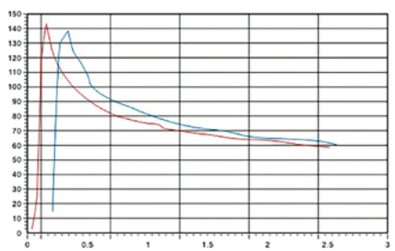

样本数据来源于试验室环境，仅供参考，贵公司如需最新数据或有特殊需求，欢迎联系搏业液压工程师。
The sample data comes from the laboratory environment and is only for reference. If your company needs the latest data or has special needs, please contact Boye hydraulic engineer.

BYJ11-54-01G

交流湿式阀用电磁铁
AC solenoids for hydraulics valves

AC 110V 50HZ
AC 220V 50HZ

其它规格可定做
Other can be customized

- 适用于 10 通径液压电磁换向阀
- 螺纹连接，线圈可实现免停机更换
- 配备手动应急装置
- 线圈内孔 ϕ26
- 采用 BMC 热固性塑料封装

- Applicable to 10-way hydraulic solenoid directional valve
- With threaded connection, the coil can be replaced without shutdown
- Equipped with manual emergency device
- Coil inner hole ϕ26
- Encapsulated in BMC thermosetting plastic

外形及连接尺寸
Outline and connection dimensions

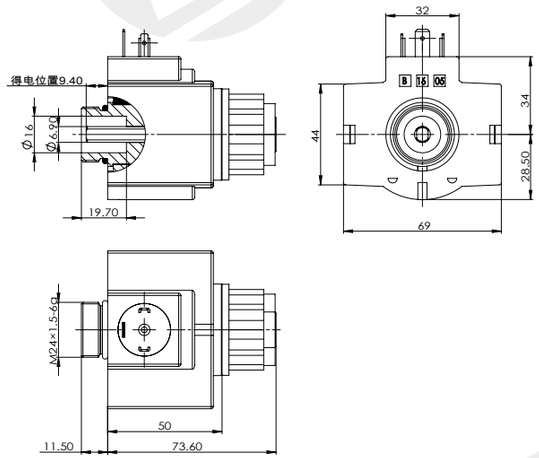

技术参数 /technical parameter		
环境温度 Ambient temperature	℃	-10~40
电压波动范围 Voltage fluctuation range	%	85~110
额定功率 Rated power	W	38
额定行程 Rated stroke	mm	4
全行程 Full stroke	mm	⩾ 8.5
工作油压 Working oil pressure	Mpa	⩽ 21
防护等级 Degree of protection		IP65
操作频率 Operating frequency	T/h	12000
通电持续率 Power on duration	%	100
绝缘等级 Insulation class		H(180)
电气连接方式 Electrical connection mode		DIN43650

注意事项
matters needing attention

1. 线圈不得单独通电使用，有烧损风险！
2. 非防爆线圈，不得使用在有爆炸危险的介质中！
3. 线圈安装后，必须接地可靠，否则有触电危险！

1. The coil shall not be powered on alone, which has the risk of burning!
2. Non explosion-proof coil shall not be used in medium with explosion risk!
3. After the coil is installed, it must be grounded reliably, otherwise there is a risk of electric shock！

力 - 位移特性曲线
F-S characteristic curve

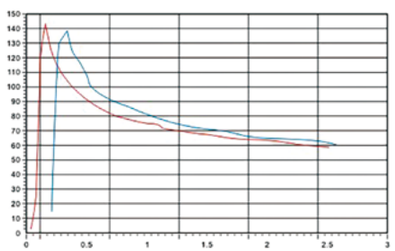

样本数据来源于试验室环境，仅供参考，贵公司如需最新数据或有特殊需求，欢迎联系搏业液压工程师。
The sample data comes from the laboratory environment and is only for reference. If your company needs the latest data or has special needs, please contact Boye hydraulic engineer.

BYJ12-27-01A

交流湿式阀用电磁铁
AC solenoids for hydraulics valves

AC 110V 50HZ
AC 220V 50HZ

其它规格可定做
Other can be customized

- 适用于 6 通径液压电磁换向阀
- 螺纹连接，线圈可实现免停机更换
- 配备手动应急装置
- 线圈内孔 ϕ20
- 采用 BMC 热固性塑料封装

- Applicable to 6-way hydraulic solenoid directional valve
- With threaded connection, the coil can be replaced without shutdown
- Equipped with manual emergency device
- Coil inner hole ϕ20
- Encapsulated in BMC thermosetting plastic

外形及连接尺寸
Outline and connection dimensions

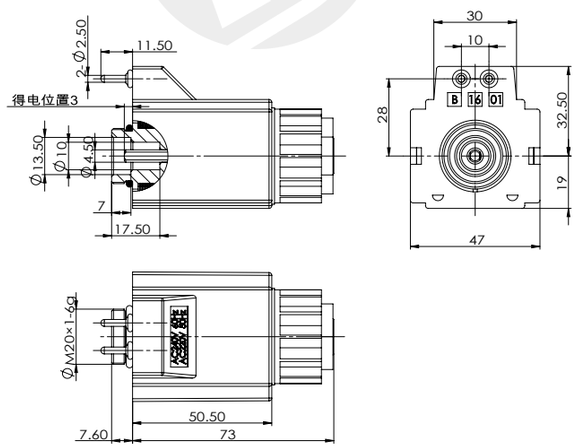

技术参数 /technical parameter		
环境温度 Ambient temperature	℃	-10~40
电压波动范围 Voltage fluctuation range	%	85~110
额定功率 Rated power	W	30
额定行程 Rated stroke	mm	3
全行程 Full stroke	mm	⩾ 6.5
工作油压 Working oil pressure	Mpa	⩽ 21
防护等级 Degree of protection		IP65
操作频率 Operating frequency	T/h	12000
通电持续率 Power on duration	%	100
绝缘等级 Insulation class		H(180)
电气连接方式 Electrical connection mode		接线盒式

注意事项
matters needing attention

1. 线圈不得单独通电使用，有烧损风险！
2. 非防爆线圈，不得使用在有爆炸危险的介质中！
3. 线圈安装后，必须接地可靠，否则有触电危险！

1. The coil shall not be powered on alone, which has the risk of burning!
2. Non explosion-proof coil shall not be used in medium with explosion risk!
3. After the coil is installed, it must be grounded reliably, otherwise there is a risk of electric shock！

力 - 位移特性曲线
F-S characteristic curve

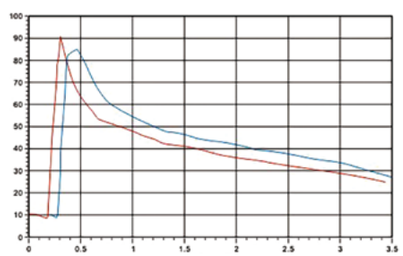

样本数据来源于试验室环境，仅供参考，贵公司如需最新数据或有特殊需求，欢迎联系搏业液压工程师。
The sample data comes from the laboratory environment and is only for reference. If your company needs the latest data or has special needs, please contact Boye hydraulic engineer.

BYJ12-27-01G

交流湿式阀用电磁铁
AC solenoids for hydraulics valves

AC 110V 50HZ
AC 220V 50HZ

其它规格可定做
Other can be customized

- 适用于 6 通径液压电磁换向阀
- 螺纹连接，线圈可实现免停机更换
- 配备手动应急装置
- 线圈内孔 ϕ20
- 采用 BMC 热固性塑料封装

- Applicable to 6-way hydraulic solenoid directional valve
- With threaded connection, the coil can be replaced without shutdown
- Equipped with manual emergency device
- Coil inner hole ϕ20
- Encapsulated in BMC thermosetting plastic

外形及连接尺寸
Outline and connection dimensions

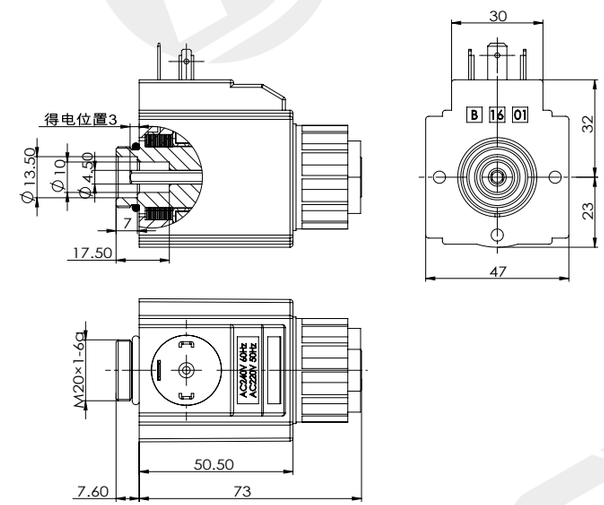

技术参数 /technical parameter		
环境温度 Ambient temperature	℃	-10~40
电压波动范围 Voltage fluctuation range	%	85~110
额定功率 Rated power	W	30
额定行程 Rated stroke	mm	3
全行程 Full stroke	mm	⩾ 6.5
工作油压 Working oil pressure	Mpa	⩽ 21
防护等级 Degree of protection		IP65
操作频率 Operating frequency	T/h	12000
通电持续率 Power on duration	%	100
绝缘等级 Insulation class		H(180)
电气连接方式 Electrical connection mode		DIN43650

注意事项
matters needing attention

1. 线圈不得单独通电使用，有烧损风险！
2. 非防爆线圈，不得使用在有爆炸危险的介质中！
3. 线圈安装后，必须接地可靠，否则有触电危险！

1. The coil shall not be powered on alone, which has the risk of burning!
2. Non explosion-proof coil shall not be used in medium with explosion risk!
3. After the coil is installed, it must be grounded reliably, otherwise there is a risk of electric shock！

力 - 位移特性曲线
F-S characteristic curve

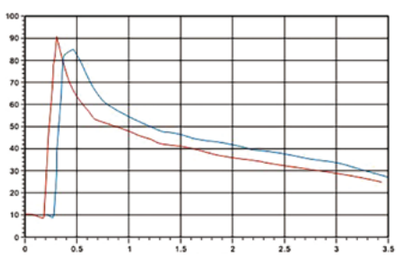

样本数据来源于试验室环境，仅供参考，贵公司如需最新数据或有特殊需求，欢迎联系搏业液压工程师。
The sample data comes from the laboratory environment and is only for reference. If your company needs the latest data or has special needs, please contact Boye hydraulic engineer.

TEL:0574-86587131 www.nbboye.net

BYJ12-54-01A

交流湿式阀用电磁铁
AC solenoids for hydraulics valves

AC 110V 50HZ
AC 220V 50HZ

其它规格可定做
Other can be customized

- 适用于 10 通径液压电磁换向阀
- 螺纹连接，线圈可实现免停机更换
- 配备手动应急装置
- 线圈内孔 ϕ26
- 采用 BMC 热固性塑料封装

- Applicable to 10-way hydraulic solenoid directional valve
- With threaded connection, the coil can be replaced without shutdown
- Equipped with manual emergency device
- Coil inner hole ϕ26
- Encapsulated in BMC thermosetting plastic

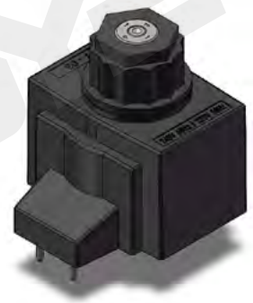

外形及连接尺寸
Outline and connection dimensions

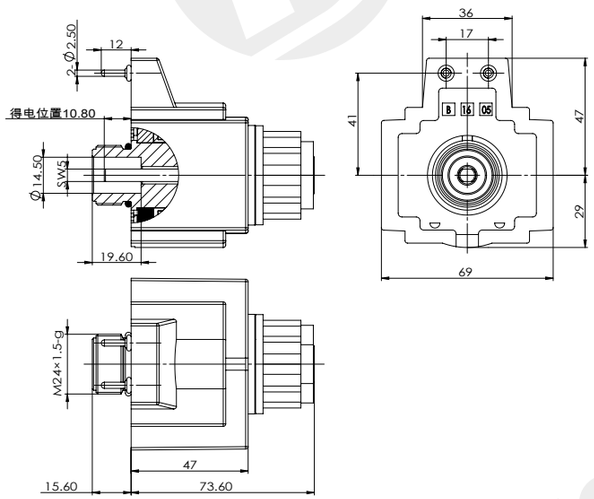

技术参数 /technical parameter		
环境温度 Ambient temperature	℃	-10~40
电压波动范围 Voltage fluctuation range	%	85~110
额定功率 Rated power	W	40
额定行程 Rated stroke	mm	4
全行程 Full stroke	mm	⩾ 8.5
工作油压 Working oil pressure	Mpa	⩽ 21
防护等级 Degree of protection		IP65
操作频率 Operating frequency	T/h	12000
通电持续率 Power on duration	%	100
绝缘等级 Insulation class		H(180)
电气连接方式 Electrical connection mode		接线盒式

注意事项
matters needing attention

1. 线圈不得单独通电使用，有烧损风险！
2. 非防爆线圈，不得使用在有爆炸危险的介质中！
3. 线圈安装后，必须接地可靠，否则有触电危险！

1. The coil shall not be powered on alone, which has the risk of burning!
2. Non explosion-proof coil shall not be used in medium with explosion risk!
3. After the coil is installed, it must be grounded reliably, otherwise there is a risk of electric shock！

力 - 位移特性曲线
F-S characteristic curve

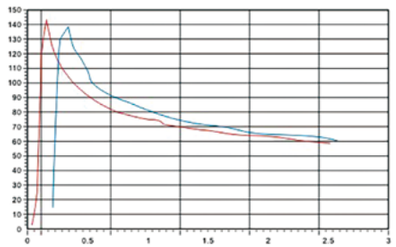

样本数据来源于试验室环境，仅供参考，贵公司如需最新数据或有特殊需求，欢迎联系搏业液压工程师。
The sample data comes from the laboratory environment and is only for reference. If your company needs the latest data or has special needs, please contact Boye hydraulic engineer.

BYJ12-54-01G

交流湿式阀用电磁铁
AC solenoids for hydraulics valves

AC 110V 50HZ
AC 220V 50HZ

其它规格可定做
Other can be customized

- 适用于 10 通径液压电磁换向阀
- 螺纹连接，线圈可实现免停机更换
- 配备手动应急装置
- 线圈内孔 ϕ26
- 采用 BMC 热固性塑料封装

- Applicable to 10-way hydraulic solenoid directional valve
- With threaded connection, the coil can be replaced without shutdown
- Equipped with manual emergency device
- Coil inner hole ϕ26
- Encapsulated in BMC thermosetting plastic

外形及连接尺寸
Outline and connection dimensions

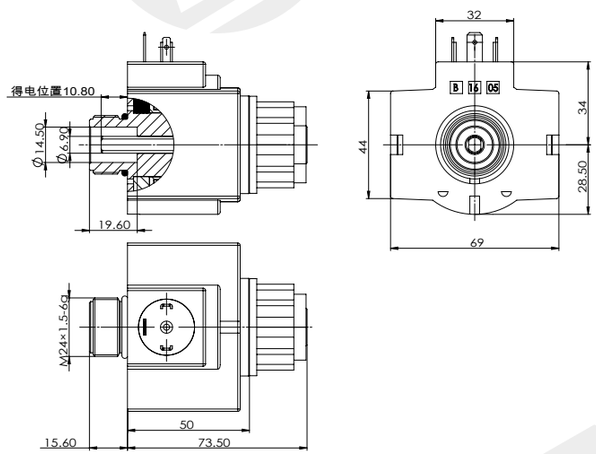

技术参数 /technical parameter		
环境温度 Ambient temperature	℃	-10~40
电压波动范围 Voltage fluctuation range	%	85~110
额定功率 Rated power	W	40
额定行程 Rated stroke	mm	4
全行程 Full stroke	mm	⩾ 8.5
工作油压 Working oil pressure	Mpa	⩽ 21
防护等级 Degree of protection		IP65
操作频率 Operating frequency	T/h	12000
通电持续率 Power on duration	%	100
绝缘等级 Insulation class		H(180)
电气连接方式 Electrical connection mode		DIN43650

注意事项
matters needing attention

1. 线圈不得单独通电使用，有烧损风险！
2. 非防爆线圈，不得使用在有爆炸危险的介质中！
3. 线圈安装后，必须接地可靠，否则有触电危险！

1. The coil shall not be powered on alone, which has the risk of burning!
2. Non explosion-proof coil shall not be used in medium with explosion risk!
3. After the coil is installed, it must be grounded reliably, otherwise there is a risk of electric shock！

力 - 位移特性曲线
F-S characteristic curve

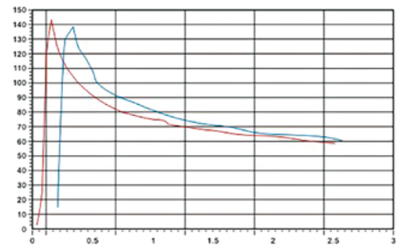

样本数据来源于试验室环境，仅供参考，贵公司如需最新数据或有特殊需求，欢迎联系搏业液压工程师。
The sample data comes from the laboratory environment and is only for reference. If your company needs the latest data or has special needs, please contact Boye hydraulic engineer.

BYG 比例阀用电磁铁

ELECTROMAGNET FOR PROPORTIONAL VALVE

- 搏业液压，BYG 比例阀用电磁铁，作为比例电磁阀关键电磁驱动元件，配合比例控制放大器，广乏应用于需要精确控制的自动化控制系统中。
- 技术标准严格按照 JBT5244/VDE0580 设计生产。
- 采用优质导磁材料退火处理和低摩擦系数导向轴承，保证磁滞小，重复精度高，响应快。
- 提供多种标准连接方式，外壳防护等级 IP65-IP69K，可满足不同领域环境需要。
- 采用高质量 H 级漆包线和绝缘材料，全塑封线圈结构，坚固耐用，散热快，即使长期使用也不会烧损。
- 导磁套工作压力≤ 21MPa，极限压力≥ 31.5MPa，爆破压力≥ 63MPa。
- 机械寿命＞ 200 万次，脉冲疲劳寿命＞ 200 万次。
- 标准产品若不能满足您的需求时，可联系我公司，若有其他特殊要求可定制，欢迎咨询。

- Boye hydraulic, byg proportional valve electromagnet, as the key electromagnetic driving element of proportional solenoid valve, combined with proportional control amplifier, is widely used in automatic control systems that need accurate control.
- The technical standard is designed and produced in strict accordance with JBT5244 / VDE0580.
- High quality magnetic conducting material annealing treatment and low friction coefficient guide bearing are adopted to ensure small hysteresis and high repetition accuracy.
- A variety of standard connection modes are provided, and the enclosure protection grade is IP65-1P69K, which can meet the environmental needs of different fields.
- It adopts high-quality H-class enamelled wire and insulating material, and fully plastic sealed coil structure, which is firm and durable, fast heat dissipation, and will not burn even if it is used for a long time.
- Working pressure of magnetic guide sleeve ≤ 21MPa, limit pressure ≥ 31.5Mpa, burst pressure ≥ 63Mpa
- Mechanical life > 2 million times, pulse fatigue life > 2 million times
- If the standard products can not meet your needs, you can contact our company. If there are other special requirements, you can customize them. Welcome to consult.

BYG01-40-01G

比例阀用电磁铁
Electromagnet for proportional valve

0.8A 10.5Ω

其它规格可定做
Other can be customized

- 适用于比例压力阀
- 4- 螺钉连接
- 配备手动调节和排气装置
- 外壳表面黑色磷化处理

- For proportional pressure valves
- 4-screw connection
- Equipped with manual adjustment and exhaust device
- Black phosphating treatment on shell surface

外形及连接尺寸
Outline and connection dimensions

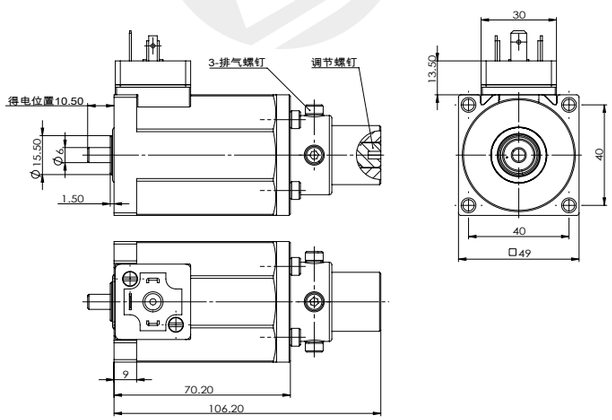

技术参数 /technical parameter		
环境温度 Ambient temperature	°C	-25~50
额定电流 Rated current	A	0.8
最大电流 Maximum current	A	1
额定电阻 Rated resistance	Ω	10.5
额定行程 Rated stroke	mm	3
全行程 Full stroke	mm	3.2
额定推力 Rated thrust	N	48
力滞环 Force hysteresis	%	≤ 3
电流滞环 Current hysteresis	%	≤ 3
重复精度 Repetition accuracy	%	≤ 1
工作油压 Working oil pressure	MPa	≤ 21
防护等级 Degree of protection		IP65
通电持续率 Power on duration	%	100
绝缘等级 Insulation class		H(180)
电气连接方式 Electrical connection mode		DIN43650

力 - 位移特性曲线
F-S characteristic curve

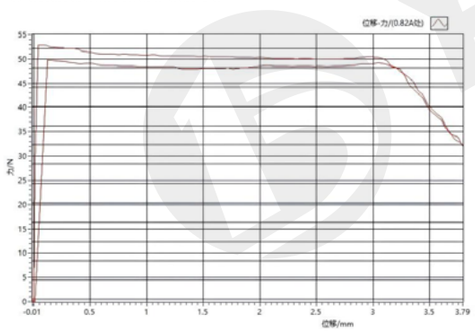

注意事项
matters needing attention

1. 首次使用或长期停机后启用，请先将系统内空气排净！
2. 可任意方向安装，建议水平安装。

1. After the first use or long-term shutdown, please exhaust the air in the system first!
2. It can be installed in any direction, and it is recommended to install horizontally.

样本数据来源于试验室环境，仅供参考，贵公司如需最新数据或有特殊需求，欢迎联系搏业液压工程师。
The sample data comes from the laboratory environment and is only for reference. If your company needs the latest data or has special needs, please contact Boye hydraulic engineer.

BYG04-16-01D

比例阀用电磁铁
Electromagnet for proportional valve

DC12V 1.2A
DC24V 0.6A

其它规格可定做
Other can be customized

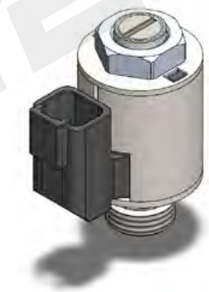

- 适用于 PV08-30A 系列电液比例螺纹插装阀
- 螺纹连接，线圈可实现免停机更换
- 配备手动调节装置
- 线圈内孔 ϕ16，全塑封工艺

- Applicable to PV08-30A series electro-hydraulic proportional threaded cartridge valve
- Threaded connection, coil can be replaced without stopping
- Equipped with manual adjustment device
- Coil inner hole ϕ16, full plastic sealing process

外形及连接尺寸
Outline and connection dimensions

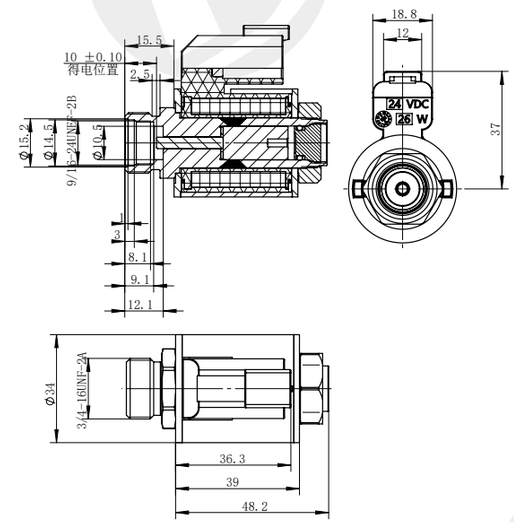

技术参数 /technical parameter			
环境温度 Ambient temperature	°C	-25~50	
额定电压 Rated voltage	VDC	12	24
额定电流 Rated current	A	1.2	0.6
额定功率 Rated power	W	26	
额定电阻 Rated resistance	Ω	4.5	18
额定行程 Rated stroke	mm	1.89	
全行程 Full stroke	mm	2	
额定推力 Rated thrust	N	50	
力滞环 Force hysteresis	%	≤ 4	
电流滞环 Current hysteresis	%	≤ 4	
重复精度 Repetition accuracy	%	≤ 1	
工作油压 Working oil pressure	MPa	≤ 21	
防护等级 Degree of protection		IP67	
通电持续率 Power on duration	%	100	
绝缘等级 Insulation class		H（180）	
电气连接方式 Electrical connection mode		DT04-2P	

力 - 位移特性曲线
F-S characteristic curve

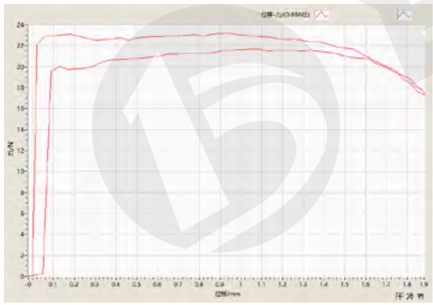

注意事项
matters needing attention

1. 首次使用或长期停机后启用，请先将系统内空气排净！
2. 可任意方向安装，建议水平安装。

1. After the first use or long-term shutdown, please exhaust the air in the system first!
2. It can be installed in any direction, and it is recommended to install horizontally.

样本数据来源于试验室环境，仅供参考，贵公司如需最新数据或有特殊需求，欢迎联系搏业液压工程师。
The sample data comes from the laboratory environment and is only for reference. If your company needs the latest data or has special needs, please contact Boye hydraulic engineer.

BYG04-21-01D

比例阀用电磁铁
Electromagnet for proportional valve

DC12V 1.5A
DC24V 0.75A

其它规格可定做
Other can be customized

- 适用于 PV70 系列电液比例螺纹插装阀
- 螺纹连接，线圈可实现免停机更换
- 线圈内孔 ϕ21.5，全塑封工艺

- Applicable to PV70 series electro-hydraulic proportional threaded cartridge valve
- Threaded connection, coil can be replaced without stopping
- Coil inner hole ϕ 21.5, full plastic sealing process

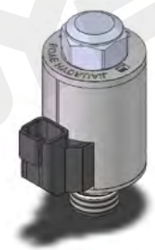

外形及连接尺寸
Outline and connection dimensions

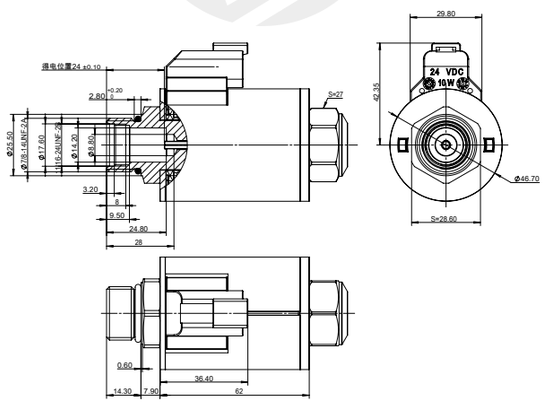

技术参数 /technical parameter			
环境温度 Ambient temperature	°C	-25~50	
额定电压 Rated voltage	VDC	12	24
额定电流 Rated current	A	1.5	0.75
最大电流 Maximum current	A	1.6	0.8
额定电阻 Rated resistance	Ω	4.5	18
额定行程 Rated stroke	mm	2.5	
全行程 Full stroke	mm	3.2	
额定推力 Rated thrust	N	50	
力滞环 Force hysteresis	%	≤ 4	
电流滞环 Current hysteresis	%	≤ 4	
重复精度 Repetition accuracy	%	≤ 1	
工作油压 Working oil pressure	MPa	≤ 21	
防护等级 Degree of protection		IP67	
通电持续率 Power on duration	%	100	
绝缘等级 Insulation class		H（180）	
电气连接方式 Electrical connection mode		DT04-2P	

力 - 位移特性曲线
F-S characteristic curve

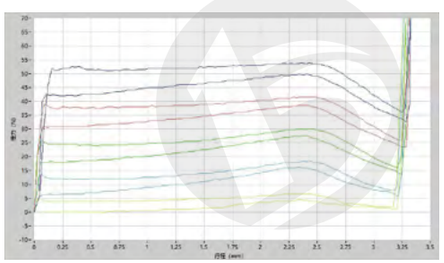

注意事项
matters needing attention

1. 首次使用或长期停机后启用，请先将系统内空气排净！
2. 可任意方向安装，建议水平安装。

1. After the first use or long-term shutdown, please exhaust the air in the system first!
2. It can be installed in any direction, and it is recommended to install horizontally.

样本数据来源于试验室环境，仅供参考，贵公司如需最新数据或有特殊需求，欢迎联系搏业液压工程师。
The sample data comes from the laboratory environment and is only for reference. If your company needs the latest data or has special needs, please contact Boye hydraulic engineer.

BYG04-21-01MD

比例阀用电磁铁
Electromagnet for proportional valve

DC12V 1.5A
DC24V 0.75A

其它规格可定做
Other can be customized

- 适用于 PV70 系列电液比例螺纹插装阀
- 螺纹连接，线圈可实现免停机更换
- 配备手动应急装置
- 线圈内孔 ϕ21.5，全塑封工艺

- Applicable to PV70 series electro-hydraulic proportional threaded cartridge valve
- Threaded connection, coil can be replaced without stopping
- Equipped with manual emergency device
- Coil inner hole ϕ 21.5, full plastic sealing process

外形及连接尺寸
Outline and connection dimensions

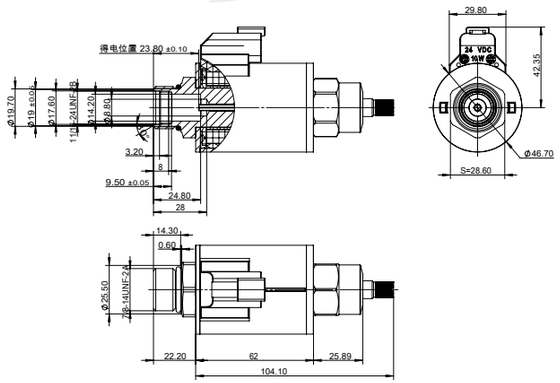

技术参数 /technical parameter			
环境温度 Ambient temperature	°C	-25~50	
额定电压 Rated voltage	VDC	12	24
额定电流 Rated current	A	1.5	0.75
最大电流 Maximum current	A	1.6	0.8
额定电阻 Rated resistance	Ω	4.5	18
额定行程 Rated stroke	mm	2.5	
全行程 Full stroke	mm	3.2	
额定推力 Rated thrust	N	50	
力滞环 Force hysteresis	%	≤ 4	
电流滞环 Current hysteresis	%	≤ 4	
重复精度 Repetition accuracy	%	≤ 1	
工作油压 Working oil pressure	MPa	≤ 21	
防护等级 Degree of protection		IP67	
通电持续率 Power on duration	%	100	
绝缘等级 Insulation class		H（180）	
电气连接方式 Electrical connection mode		DT04-2P	

力 - 位移特性曲线
F-S characteristic curve

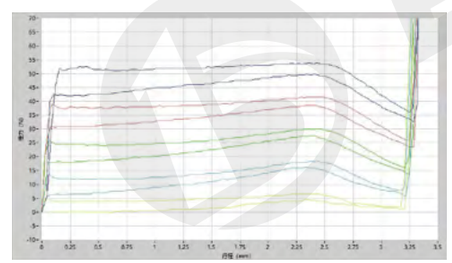

注意事项
matters needing attention

1. 首次使用或长期停机后启用，请先将系统内空气排净！
2. 可任意方向安装，建议水平安装。

1. After the first use or long-term shutdown, please exhaust the air in the system first!
2. It can be installed in any direction, and it is recommended to install horizontally.

样本数据来源于试验室环境，仅供参考，贵公司如需最新数据或有特殊需求，欢迎联系搏业液压工程师。
The sample data comes from the laboratory environment and is only for reference. If your company needs the latest data or has special needs, please contact Boye hydraulic engineer.

BYG04-21-02D

比例阀用电磁铁
Electromagnet for proportional valve

DC12V 1.5A
DC24V 0.75A

其它规格可定做
Other can be customized

- 适用于 PV72 系列电液比例螺纹插装阀
- 螺纹连接，线圈可实现免停机更换
- 线圈内孔 ϕ21.5，全塑封工艺

- Applicable to PV72 series electro-hydraulic proportional threaded cartridge valve
- Threaded connection, coil can be replaced without stopping
- Coil inner hole ϕ 21.5, full plastic sealing process

外形及连接尺寸
Outline and connection dimensions

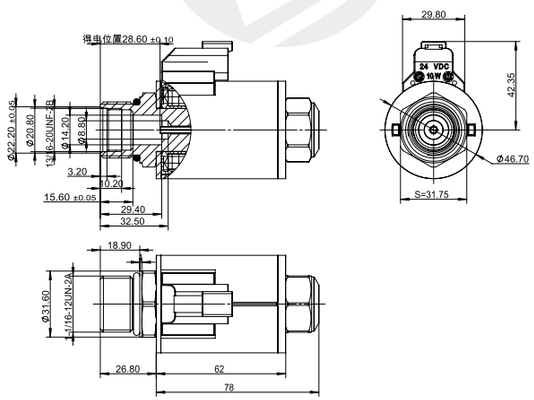

技术参数 /technical parameter			
环境温度 Ambient temperature	℃	-25~50	
额定电压 Rated voltage	VDC	12	24
额定电流 Rated current	A	1.5	0.75
最大电流 Maximum current	A	1.6	0.8
额定电阻 Rated resistance	Ω	4.5	18
额定行程 Rated stroke	mm	2.5	
全行程 Full stroke	mm	3.2	
额定推力 Rated thrust	N	50	
力滞环 Force hysteresis	%	≤ 4	
电流滞环 Current hysteresis	%	≤ 4	
重复精度 Repetition accuracy	%	≤ 1	
工作油压 Working oil pressure	MPa	≤ 21	
防护等级 Degree of protection		IP67	
通电持续率 Power on duration	%	100	
绝缘等级 Insulation class		H（180）	
电气连接方式 Electrical connection mode		DT04-2P	

力 - 位移特性曲线
F-S characteristic curve

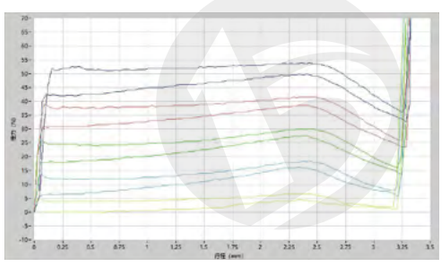

注意事项
matters needing attention

1. 首次使用或长期停机后启用，请先将系统内空气排净！
2. 可任意方向安装，建议水平安装。

1. After the first use or long-term shutdown, please exhaust the air in the system first!
2. It can be installed in any direction, and it is recommended to install horizontally.

样本数据来源于试验室环境，仅供参考，贵公司如需最新数据或有特殊需求，欢迎联系博业液压工程师。
The sample data comes from the laboratory environment and is only for reference. If your company needs the latest data or has special needs, please contact Boye hydraulic engineer.

BYG04-21-02MD

比例阀用电磁铁
Electromagnet for proportional valve

DC12V 1.5A
DC24V 0.75A

其它规格可定做
Other can be customized

- 适用于 PV72 系列电液比例螺纹插装阀
- 螺纹连接，线圈可实现免停机更换
- 配备手动应急装置
- 线圈内孔 ϕ21.5，全塑封工艺

- Applicable to PV72 series electro-hydraulic proportional threaded cartridge valve
- Threaded connection, coil can be replaced without stopping
- Equipped with manual emergency device
- Coil inner hole ϕ 21.5, full plastic sealing process

外形及连接尺寸
Outline and connection dimensions

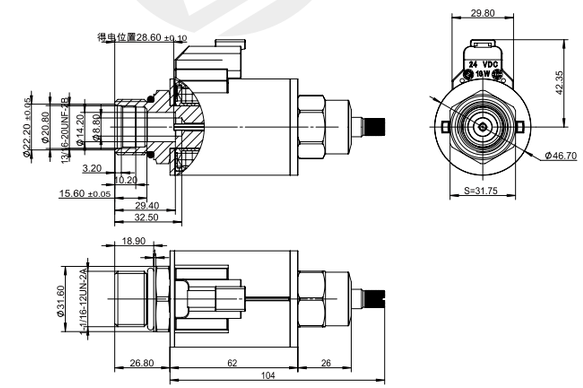

技术参数 /technical parameter			
环境温度 Ambient temperature	℃	-25~50	
额定电压 Rated voltage	VDC	12	24
额定电流 Rated current	A	1.5	0.75
最大电流 Maximum current	A	1.6	0.8
额定电阻 Rated resistance	Ω	4.5	18
额定行程 Rated stroke	mm	2.5	
全行程 Full stroke	mm	3.2	
额定推力 Rated thrust	N	50	
力滞环 Force hysteresis	%	≤ 4	
电流滞环 Current hysteresis	%	≤ 4	
重复精度 Repetition accuracy	%	≤ 1	
工作油压 Working oil pressure	MPa	≤ 21	
防护等级 Degree of protection		IP67	
通电持续率 Power on duration	%	100	
绝缘等级 Insulation class		H（180）	
电气连接方式 Electrical connection mode		DT04-2P	

力 - 位移特性曲线
F-S characteristic curve

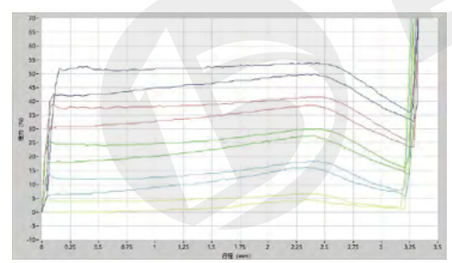

注意事项
matters needing attention

1. 首次使用或长期停机后启用，请先将系统内空气排净！
2. 可任意方向安装，建议水平安装。

1. After the first use or long-term shutdown, please exhaust the air in the system first!
2. It can be installed in any direction, and it is recommended to install horizontally.

样本数据来源于试验室环境，仅供参考，贵公司如需最新数据或有特殊需求，欢迎联系博业液压工程师。
The sample data comes from the laboratory environment and is only for reference. If your company needs the latest data or has special needs, please contact Boye hydraulic engineer.

BYG05-45-01MG

比例阀用电磁铁
Electromagnet for proportional valve

DC12V 2.36A
DC24V 1.18A

其它规格可定做
Other can be customized

- 适用于 6 通径 SRCB 系列电液比例螺纹插装阀
- 螺纹连接，线圈可实现免停机更换
- 配备手动应急装置
- 配备手动调整装置（内置弹簧）
- 线圈内孔 ϕ23，全塑封工艺

- Applicable to 6-way SRCB series electro-hydraulic proportional threaded cartridge valve
- Threaded connection, coil can be replaced without stopping
- Equipped with manual emergency device
- Equipped with manual adjustment device (built-in spring)
- Coil inner hole ϕ 23. All-plastic sealing process

外形及连接尺寸
Outline and connection dimensions

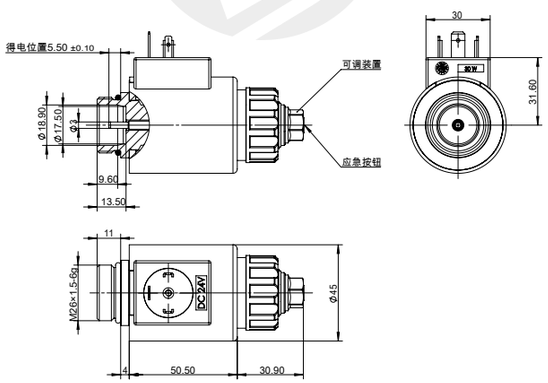

技术参数 /technical parameter			
环境温度 Ambient temperature	°C	-25~50	
额定电压 Rated voltage	VDC	12	24
额定电流 Rated current	A	2.36	1.18
最大电流 Maximum current	A	2.4	1.2
额定电阻 Rated resistance	Ω	2.5	10
额定行程 Rated stroke	mm	3.2	
全行程 Full stroke	mm	6.5	
额定推力 Rated thrust	N	50	
力滞环 Force hysteresis	%	≤ 4	
电流滞环 Current hysteresis	%	≤ 4	
重复精度 Repetition accuracy	%	≤ 1	
工作油压 Working oil pressure	MPa	≤ 21	
防护等级 Degree of protection		IP65	
通电持续率 Power on duration	%	100	
绝缘等级 Insulation class		H（180）	
电气连接方式 Electrical connection mode		DIN43650	

力 - 位移特性曲线
F-S characteristic curve

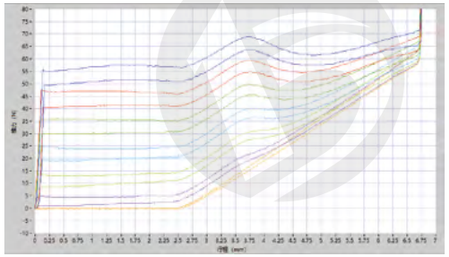

注意事项
matters needing attention

1. 首次使用或长期停机后启用，请先将系统内空气排净！
2. 可任意方向安装，建议水平安装。

1. After the first use or long-term shutdown, please exhaust the air in the system first!
2. It can be installed in any direction, and it is recommended to install horizontally.

样本数据来源于试验室环境，仅供参考，贵公司如需最新数据或有特殊需求，欢迎联系搏业液压工程师。
The sample data comes from the laboratory environment and is only for reference. If your company needs the latest data or has special needs, please contact Boye hydraulic engineer.

BYG05-45-01MD

比例阀用电磁铁
Electromagnet for proportional valve

DC12V 2.36A
DC24V 1.18A

其它规格可定做
Other can be customized

- 适用于 6 通径 SRCB 系列电液比例螺纹插装阀
- 螺纹连接，线圈可实现免停机更换
- 配备手动应急装置
- 配备手动调整装置（内置弹簧）
- 线圈内孔 ϕ23，全塑封工艺

- Applicable to 6-way SRCB series electro-hydraulic proportional threaded cartridge valve
- Threaded connection, coil can be replaced without stopping
- Equipped with manual emergency device
- Equipped with manual adjustment device (built-in spring)
- Coil inner hole ϕ 23. All-plastic sealing process

外形及连接尺寸
Outline and connection dimensions

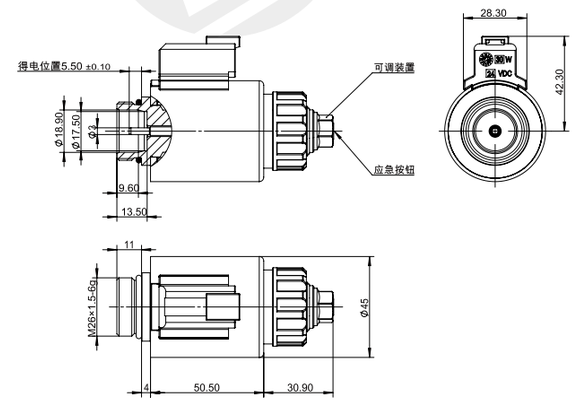

技术参数 /technical parameter			
环境温度 Ambient temperature	°C	-25~50	
额定电压 Rated voltage	VDC	12	24
额定电流 Rated current	A	2.36	1.18
最大电流 Maximum current	A	2.4	1.2
额定电阻 Rated resistance	Ω	2.5	10
额定行程 Rated stroke	mm	3.2	
全行程 Full stroke	mm	6.5	
额定推力 Rated thrust	N	50	
力滞环 Force hysteresis	%	≤ 4	
电流滞环 Current hysteresis	%	≤ 4	
重复精度 Repetition accuracy	%	≤ 1	
工作油压 Working oil pressure	MPa	≤ 21	
防护等级 Degree of protection		IP67	
通电持续率 Power on duration	%	100	
绝缘等级 Insulation class		H（180）	
电气连接方式 Electrical connection mode		DT04-2P	

力 - 位移特性曲线
F-S characteristic curve

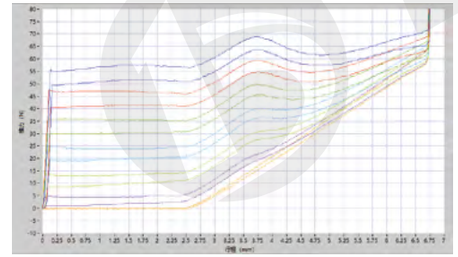

注意事项
matters needing attention

1. 首次使用或长期停机后启用，请先将系统内空气排净！
2. 可任意方向安装，建议水平安装。

1. After the first use or long-term shutdown, please exhaust the air in the system first!
2. It can be installed in any direction, and it is recommended to install horizontally.

样本数据来源于试验室环境，仅供参考，贵公司如需最新数据或有特殊需求，欢迎联系搏业液压工程师。
The sample data comes from the laboratory environment and is only for reference. If your company needs the latest data or has special needs, please contact Boye hydraulic engineer.

BYG06-37-01MG

比例阀用电磁铁
Electromagnet for proportional valve

DC12V 1.2A
DC24V 0.6A

其它规格可定做
Other can be customized

- 适用于 PRDF 系列电液比例螺纹插装溢流阀
- 螺纹连接，线圈可实现免停机更换
- 配备手动应急装置
- 配备手动调整装置（内置弹簧）
- 线圈内孔 ϕ19，全塑封工艺

- Applicable to PRDF Series Electro-hydraulic Proportional Threaded Cartridge Relief Valve
- Threaded connection, coil can be replaced without stopping
- Equipped with manual emergency device
- Equipped with manual adjustment device (built-in spring)
- Coil inner hole ϕ 19. All-plastic sealing process

外形及连接尺寸
Outline and connection dimensions

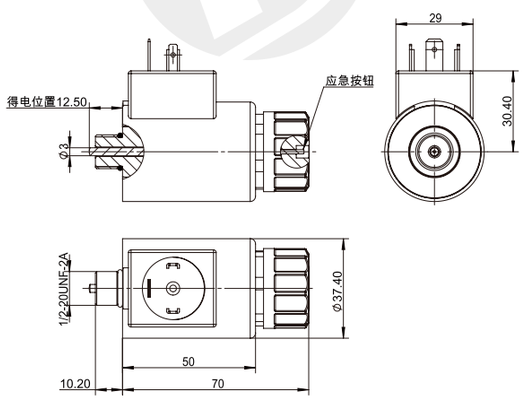

技术参数 /technical parameter			
环境温度 Ambient temperature	°C	-25~50	
额定电压 Rated voltage	VDC	12	24
额定电流 Rated current	A	1.2	0.6
最大电流 Maximum current	A	1.32	0.68
额定电阻 Rated resistance	Ω	6.6	27
额定行程 Rated stroke	mm	2	
全行程 Full stroke	mm	2.5	
额定推力 Rated thrust	N	45	
力滞环 Force hysteresis	%	≤ 4	
电流滞环 Current hysteresis	%	≤ 4	
重复精度 Repetition accuracy	%	≤ 1	
工作油压 Working oil pressure	MPa	≤ 21	
防护等级 Degree of protection		IP65	
通电持续率 Power on duration	%	100	
绝缘等级 Insulation class		H（180）	
电气连接方式 Electrical connection mode		DIN43650	

力 - 位移特性曲线
F-S characteristic curve

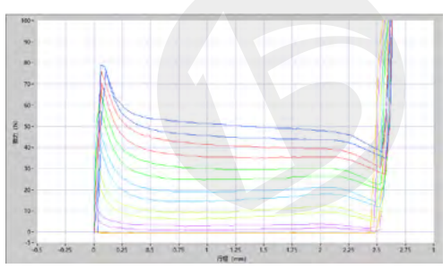

注意事项
matters needing attention

1. 首次使用或长期停机后启用，请先将系统内空气排净！
2. 可任意方向安装，建议水平安装。

1. After the first use or long-term shutdown, please exhaust the air in the system first!
2. It can be installed in any direction, and it is recommended to install horizontally.

样本数据来源于试验室环境，仅供参考，贵公司如需最新数据或有特殊需求，欢迎联系搏业液压工程师。
The sample data comes from the laboratory environment and is only for reference. If your company needs the latest data or has special needs, please contact Boye hydraulic engineer.

BYG06-37-01MD

比例阀用电磁铁
Electromagnet for proportional valve

DC12V 1.2A
DC24V 0.6A

其它规格可定做
Other can be customized

- 适用于 PRDF 系列电液比例螺纹插装溢流阀
- 螺纹连接，线圈可实现免停机更换
- 配备手动应急装置
- 配备手动调整装置（内置弹簧）
- 线圈内孔 ϕ19，全塑封工艺

- Applicable to PRDF Series Electro-hydraulic Proportional Threaded Cartridge Relief Valve
- Threaded connection, coil can be replaced without stopping
- Equipped with manual emergency device
- Equipped with manual adjustment device (built-in spring)
- Coil inner hole ϕ 19. All-plastic sealing process

外形及连接尺寸
Outline and connection dimensions

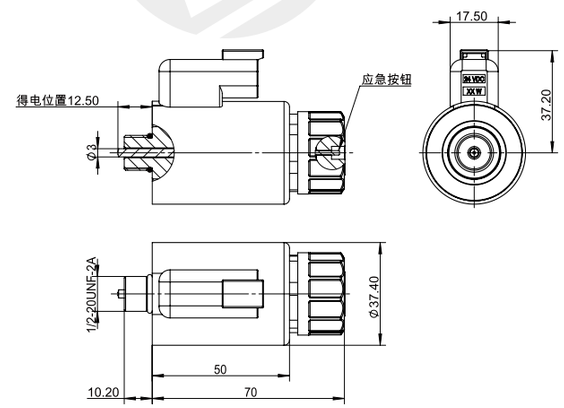

技术参数 /technical parameter			
环境温度 Ambient temperature	°C	-25~50	
额定电压 Rated voltage	VDC	12	24
额定电流 Rated current	A	1.2	0.6
最大电流 Maximum current	A	1.32	0.68
额定电阻 Rated resistance	Ω	6.6	27
额定行程 Rated stroke	mm	2	
全行程 Full stroke	mm	2.5	
额定推力 Rated thrust	N	45	
力滞环 Force hysteresis	%	≤ 4	
电流滞环 Current hysteresis	%	≤ 4	
重复精度 Repetition accuracy	%	≤ 1	
工作油压 Working oil pressure	MPa	≤ 21	
防护等级 Degree of protection		IP67	
通电持续率 Power on duration	%	100	
绝缘等级 Insulation class		H（180）	
电气连接方式 Electrical connection mode		DT04-2P	

力 - 位移特性曲线
F-S characteristic curve

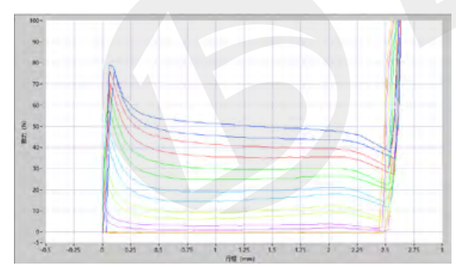

注意事项
matters needing attention

1. 首次使用或长期停机后启用，请先将系统内空气排净！
2. 可任意方向安装，建议水平安装。

1. After the first use or long-term shutdown, please exhaust the air in the system first!
2. It can be installed in any direction, and it is recommended to install horizontally.

样本数据来源于试验室环境，仅供参考，贵公司如需最新数据或有特殊需求，欢迎联系搏业液压工程师。
The sample data comes from the laboratory environment and is only for reference. If your company needs the latest data or has special needs, please contact Boye hydraulic engineer.

BYG06-45-01MG

比例阀用电磁铁
Electromagnet for proportional valve

DC12V 1.5A
DC24V 0.75A

其它规格可定做
Other can be customized

- 适用于 6 通径 4WRA 系列电液比例换向阀
- 螺纹连接，线圈可实现免停机更换
- 配备手动调整装置
- 防尘防水设计
- 线圈内孔 ϕ23，全塑封工艺

- Applicable to 6-way 4WRA series electro-hydraulic proportional directional valve
- Threaded connection, coil can be replaced without stopping
- Equipped with manual adjustment device
- Dust and waterproof design
- Coil inner hole ϕ 23. All-plastic sealing process

外形及连接尺寸
Outline and connection dimensions

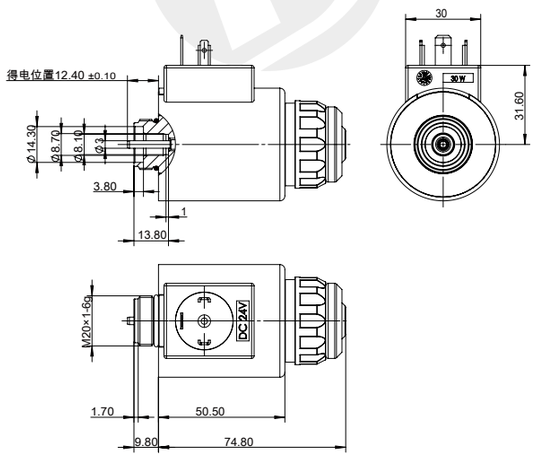

技术参数 /technical parameter			
环境温度 Ambient temperature	°C	-25~50	
额定电压 Rated voltage	VDC	12	24
额定电流 Rated current	A	1.5	0.75
最大电流 Maximum current	A	1.6	0.8
额定电阻 Rated resistance	Ω	5	20
额定行程 Rated stroke	mm	3	
全行程 Full stroke	mm	6.8	
额定推力 Rated thrust	N	60	
力滞环 Force hysteresis	%	≤ 4	
电流滞环 Current hysteresis	%	≤ 4	
重复精度 Repetition accuracy	%	≤ 1	
工作油压 Working oil pressure	MPa	≤ 21	
防护等级 Degree of protection		IP65	
通电持续率 Power on duration	%	100	
绝缘等级 Insulation class		H（180）	
电气连接方式 Electrical connection mode		DIN43650	

力 - 位移特性曲线
F-S characteristic curve

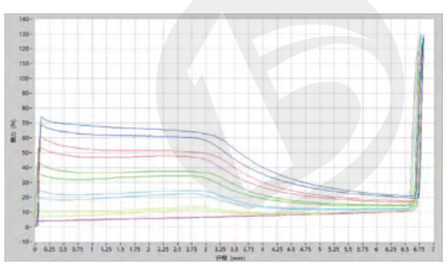

注意事项
matters needing attention

1. 首次使用或长期停机后启用，请先将系统内空气排净！
2. 可任意方向安装，建议水平安装。

1. After the first use or long-term shutdown, please exhaust the air in the system first!
2. It can be installed in any direction, and it is recommended to install horizontally.

样本数据来源于试验室环境，仅供参考，贵公司如需最新数据或有特殊需求，欢迎联系搏业液压工程师。
The sample data comes from the laboratory environment and is only for reference. If your company needs the latest data or has special needs, please contact Boye hydraulic engineer.

BYG06-45-01MD

比例阀用电磁铁
Electromagnet for proportional valve

DC12V 1.5A
DC24V 0.75A

其它规格可定做
Other can be customized

- 适用于 6 通径 4WRA 系列电液比例换向阀
- 螺纹连接，线圈可实现免停机更换
- 配备手动调整装置
- 防尘防水设计
- 线圈内孔 ϕ23，全塑封工艺

- Applicable to 6-way 4WRA series electro-hydraulic proportional directional valve
- Threaded connection, coil can be replaced without stopping
- Equipped with manual emergency device
- Equipped with manual adjustment device (built-in spring)
- Coil inner hole ϕ 23. All-plastic sealing process

外形及连接尺寸
Outline and connection dimensions

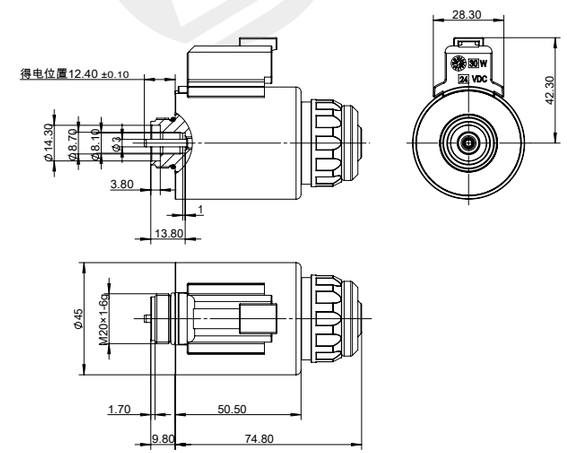

技术参数 /technical parameter			
环境温度 Ambient temperature	°C	-25~50	
额定电压 Rated voltage	VDC	12	24
额定电流 Rated current	A	1.5	0.75
最大电流 Maximum current	A	1.6	0.8
额定电阻 Rated resistance	Ω	5	20
额定行程 Rated stroke	mm	3	
全行程 Full stroke	mm	6.8	
额定推力 Rated thrust	N	60	
力滞环 Force hysteresis	%	≤ 4	
电流滞环 Current hysteresis	%	≤ 4	
重复精度 Repetition accuracy	%	≤ 1	
工作油压 Working oil pressure	MPa	≤ 21	
防护等级 Degree of protection		IP67	
通电持续率 Power on duration	%	100	
绝缘等级 Insulation class		H（180）	
电气连接方式 Electrical connection mode		DT04-2P	

力 - 位移特性曲线
F-S characteristic curve

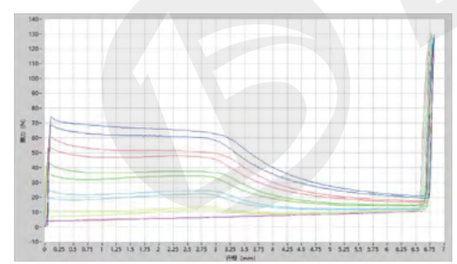

注意事项
matters needing attention

1. 首次使用或长期停机后启用，请先将系统内空气排净！
2. 可任意方向安装，建议水平安装。

1. After the first use or long-term shutdown, please exhaust the air in the system first!
2. It can be installed in any direction, and it is recommended to install horizontally.

样本数据来源于试验室环境，仅供参考，贵公司如需最新数据或有特殊需求，欢迎联系搏业液压工程师。
The sample data comes from the laboratory environment and is only for reference. If your company needs the latest data or has special needs, please contact Boye hydraulic engineer.

BYG07-37-01MG

比例阀用电磁铁
Electromagnet for proportional valve

DC12V 1.76A
DC24V 1.2A

其它规格可定做
Other can be customized

- 适用于 5 通径 KBPS 系列电液比例溢流阀
- 螺纹连接，线圈可实现免停机更换
- 配备手动调整装置
- 线圈内孔 ϕ19，全塑封工艺

- Suitable for 5-port KBPS series electro-hydraulic proportional relief valve
- Threaded connection, coil can be replaced without stopping
- Equipped with manual adjustment device
- Coil inner hole ϕ 19. All-plastic sealing process

外形及连接尺寸
Outline and connection dimensions

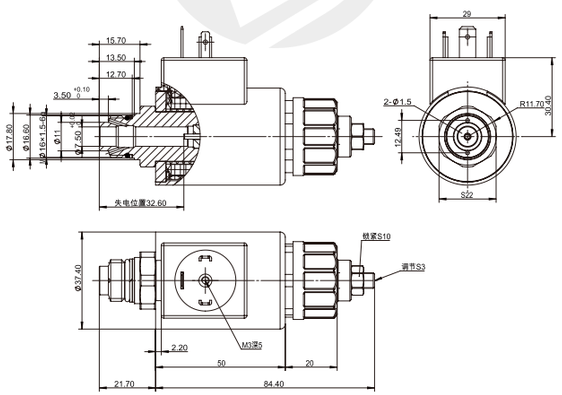

技术参数 /technical parameter			
环境温度 Ambient temperature	°C	-25~50	
额定电压 Rated voltage	VDC	12	24
额定电流 Rated current	A	1.76	1.2
最大电流 Maximum current	A	1.8	1.25
额定电阻 Rated resistance	Ω	2.3	4.8
额定行程 Rated stroke	mm	2.4	
全行程 Full stroke	mm	2.7	
额定推力 Rated thrust	N	40	
力滞环 Force hysteresis	%	≤ 4	
电流滞环 Current hysteresis	%	≤ 4	
重复精度 Repetition accuracy	%	≤ 1	
工作油压 Working oil pressure	MPa	≤ 21	
防护等级 Degree of protection		IP65	
通电持续率 Power on duration	%	100	
绝缘等级 Insulation class		H（180）	
电气连接方式 Electrical connection mode		DIN43650	

力 - 位移特性曲线
F-S characteristic curve

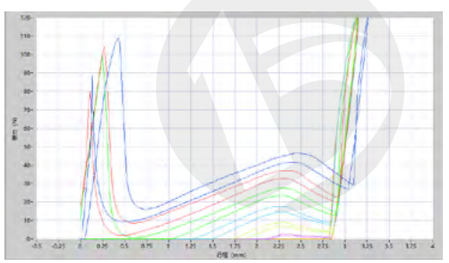

注意事项
matters needing attention

1. 首次使用或长期停机后启用，请先将系统内空气排净！
2. 可任意方向安装，建议水平安装。

1. After the first use or long-term shutdown, please exhaust the air in the system first!
2. It can be installed in any direction, and it is recommended to install horizontally.

样本数据来源于试验室环境，仅供参考，贵公司如需最新数据或有特殊需求，欢迎联系搏业液压工程师。
The sample data comes from the laboratory environment and is only for reference. If your company needs the latest data or has special needs, please contact Boye hydraulic engineer.

BYG07-37-01MD

比例阀用电磁铁
Electromagnet for proportional valve

DC12V 1.76A
DC24V 1.2A

其它规格可定做
Other can be customized

- 适用于 5 通径 KBPS 系列电液比例溢流阀
- 螺纹连接，线圈可实现免停机更换
- 配备手动调整装置
- 线圈内孔 ϕ19，全塑封工艺

- Suitable for 5-port KBPS series electro-hydraulic proportional relief valve
- Threaded connection, coil can be replaced without stopping
- Equipped with manual adjustment device
- Coil inner hole ϕ 19. All-plastic sealing process

外形及连接尺寸
Outline and connection dimensions

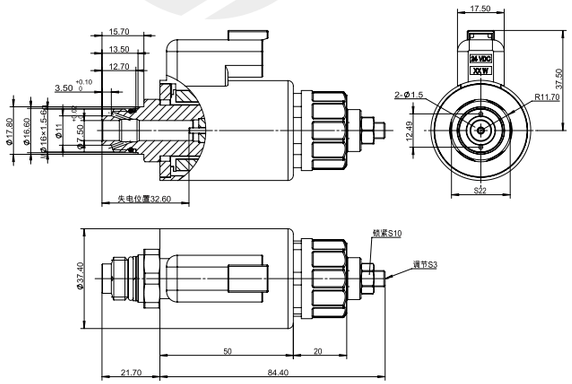

技术参数 /technical parameter			
环境温度 Ambient temperature	°C	-25~50	
额定电压 Rated voltage	VDC	12	24
额定电流 Rated current	A	1.76	1.2
最大电流 Maximum current	A	1.8	1.25
额定电阻 Rated resistance	Ω	2.3	4.8
额定行程 Rated stroke	mm	2.4	
全行程 Full stroke	mm	2.7	
额定推力 Rated thrust	N	40	
力滞环 Force hysteresis	%	≤ 4	
电流滞环 Current hysteresis	%	≤ 4	
重复精度 Repetition accuracy	%	≤ 1	
工作油压 Working oil pressure	MPa	≤ 21	
防护等级 Degree of protection		IP67	
通电持续率 Power on duration	%	100	
绝缘等级 Insulation class		H（180）	
电气连接方式 Electrical connection mode		DT04-2P	

力 - 位移特性曲线
F-S characteristic curve

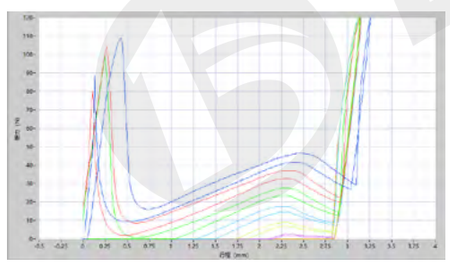

注意事项
matters needing attention

1. 首次使用或长期停机后启用，请先将系统内空气排净！
2. 可任意方向安装，建议水平安装。

1. After the first use or long-term shutdown, please exhaust the air in the system first!
2. It can be installed in any direction, and it is recommended to install horizontally.

样本数据来源于试验室环境，仅供参考，贵公司如需最新数据或有特殊需求，欢迎联系搏业液压工程师。
The sample data comes from the laboratory environment and is only for reference. If your company needs the latest data or has special needs, please contact Boye hydraulic engineer.

BYG07-37-02G

比例阀用电磁铁
Electromagnet for proportional valve

DC12V 1.2A
DC24V 0.6A

其它规格可定做
Other can be customized

- 适用于 5 通径电液比例换向阀
- 螺纹连接，线圈可实现免停机更换
- 线圈内孔 ϕ19，全塑封工艺

- Applicable to 5-way electro-hydraulic proportional directional valve
- Threaded connection, coil can be replaced without stopping
- Coil inner hole ϕ 19. All-plastic sealing process

外形及连接尺寸
Outline and connection dimensions

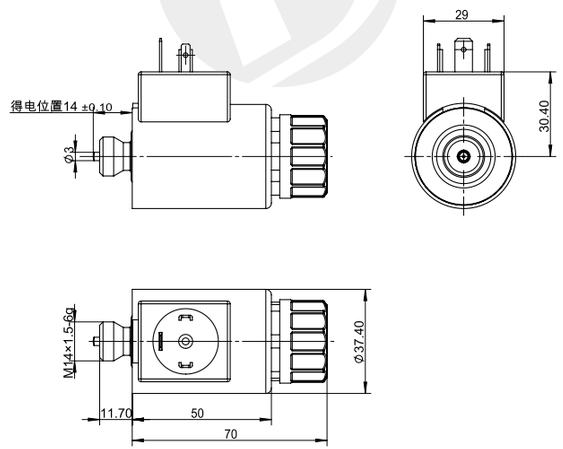

技术参数 /technical parameter			
环境温度 Ambient temperature	°C	-25~50	
额定电压 Rated voltage	VDC	12	24
额定电流 Rated current	A	1.2	0.6
最大电流 Maximum current	A	1.36	0.68
额定电阻 Rated resistance	Ω	5.75	23
额定行程 Rated stroke	mm	2.4	
全行程 Full stroke	mm	2.7	
额定推力 Rated thrust	N	40	
力滞环 Force hysteresis	%	≤ 4	
电流滞环 Current hysteresis	%	≤ 4	
重复精度 Repetition accuracy	%	≤ 1	
工作油压 Working oil pressure	MPa	≤ 21	
防护等级 Degree of protection		IP65	
通电持续率 Power on duration	%	100	
绝缘等级 Insulation class		H（180）	
电气连接方式 Electrical connection mode		DIN43650	

力 - 位移特性曲线
F-S characteristic curve

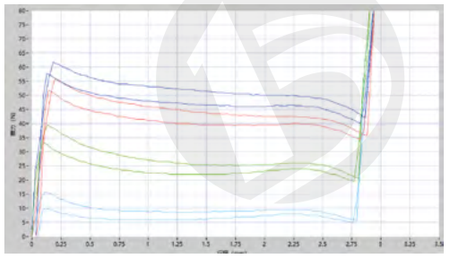

注意事项
matters needing attention

1. 首次使用或长期停机后启用，请先将系统内空气排净！
2. 可任意方向安装，建议水平安装。

1. After the first use or long-term shutdown, please exhaust the air in the system first!
2. It can be installed in any direction, and it is recommended to install horizontally.

样本数据来源于试验室环境，仅供参考，贵公司如需最新数据或有特殊需求，欢迎联系搏业液压工程师。
The sample data comes from the laboratory environment and is only for reference. If your company needs the latest data or has special needs, please contact Boye hydraulic engineer.

BYG07-37-02D

比例阀用电磁铁
Electromagnet for proportional valve

DC12V 1.2A
DC24V 0.6A

其它规格可定做
Other can be customized

- 适用于 5 通径电液比例换向阀
- 螺纹连接，线圈可实现免停机更换
- 线圈内孔 ϕ19，全塑封工艺

- Applicable to 5-way electro-hydraulic proportional directional valve
- Threaded connection, coil can be replaced without stopping
- Coil inner hole ϕ 19. All-plastic sealing process

外形及连接尺寸
Outline and connection dimensions

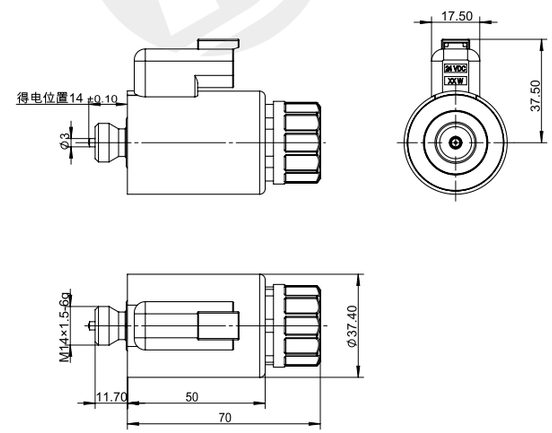

技术参数 /technical parameter			
环境温度 Ambient temperature	°C	-25~50	
额定电压 Rated voltage	VDC	12	24
额定电流 Rated current	A	1.2	0.6
最大电流 Maximum current	A	1.36	0.68
额定电阻 Rated resistance	Ω	5.75	23
额定行程 Rated stroke	mm	2.4	
全行程 Full stroke	mm	2.7	
额定推力 Rated thrust	N	40	
力滞环 Force hysteresis	%	≤ 4	
电流滞环 Current hysteresis	%	≤ 4	
重复精度 Repetition accuracy	%	≤ 1	
工作油压 Working oil pressure	MPa	≤ 21	
防护等级 Degree of protection		IP67	
通电持续率 Power on duration	%	100	
绝缘等级 Insulation class		H（180）	
电气连接方式 Electrical connection mode		DT04-2P	

力 - 位移特性曲线
F-S characteristic curve

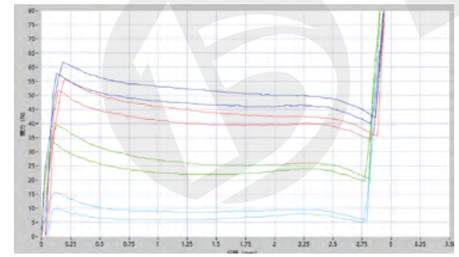

注意事项
matters needing attention

1. 首次使用或长期停机后启用，请先将系统内空气排净！
2. 可任意方向安装，建议水平安装。

1. After the first use or long-term shutdown, please exhaust the air in the system first!
2. It can be installed in any direction, and it is recommended to install horizontally.

样本数据来源于试验室环境，仅供参考，贵公司如需最新数据或有特殊需求，欢迎联系搏业液压工程师。
The sample data comes from the laboratory environment and is only for reference. If your company needs the latest data or has special needs, please contact Boye hydraulic engineer.

TEL:0574-86587131 www.nbboye.net

BYG07-37-03MD

比例阀用电磁铁
Electromagnet for proportional valve

DC12V 1.2A
DC24V 0.6A

其它规格可定做
Other can be customized

- 适用于 5 通径电液比例换向阀
- 螺纹连接，线圈可实现免停机更换
- 配备手动调整装置
- 防尘防水设计
- 线圈内孔 ϕ19，全塑封工艺

- Applicable to 5-way electro-hydraulic proportional directional valve
- Threaded connection, coil can be replaced without stopping
- Equipped with manual adjustment device
- Dust and waterproof design
- Coil inner hole ϕ19. All-plastic sealing process

外形及连接尺寸
Outline and connection dimensions

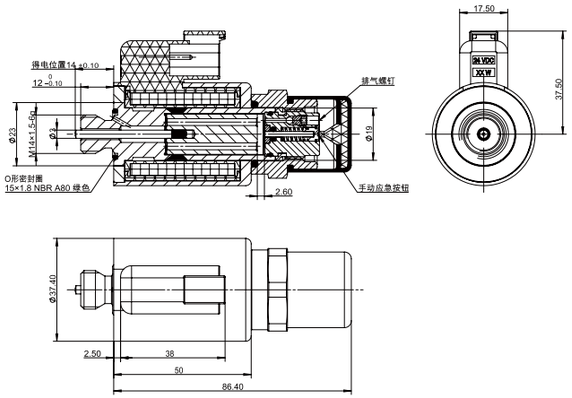

技术参数 /technical parameter			
环境温度 Ambient temperature	°C	-25~50	
额定电压 Rated voltage	VDC	12	24
额定电流 Rated current	A	1.2	0.6
最大电流 Maximum current	A	1.36	0.68
额定电阻 Rated resistance	Ω	5.75	23
额定行程 Rated stroke	mm	2.4	
全行程 Full stroke	mm	2.7	
额定推力 Rated thrust	N	40	
力滞环 Force hysteresis	%	≤ 4	
电流滞环 Current hysteresis	%	≤ 4	
重复精度 Repetition accuracy	%	≤ 1	
工作油压 Working oil pressure	MPa	≤ 21	
防护等级 Degree of protection		IP67	
通电持续率 Power on duration	%	100	
绝缘等级 Insulation class		H（180）	
电气连接方式 Electrical connection mode		DT04-2P	

力 - 位移特性曲线
F-S characteristic curve

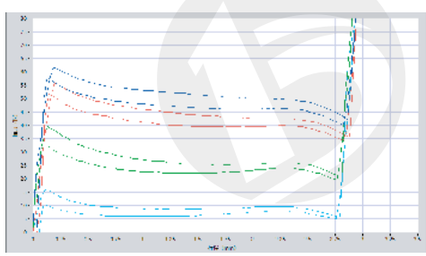

注意事项
matters needing attention

1. 首次使用或长期停机后启用，请先将系统内空气排净！
2. 可任意方向安装，建议水平安装。

1. After the first use or long-term shutdown, please exhaust the air in the system first!
2. It can be installed in any direction, and it is recommended to install horizontally.

样本数据来源于试验室环境，仅供参考，贵公司如需最新数据或有特殊需求，欢迎联系搏业液压工程师。
The sample data comes from the laboratory environment and is only for reference. If your company needs the latest data or has special needs, please contact Boye hydraulic engineer.

BYG07-37-04MD

比例阀用电磁铁
Electromagnet for proportional valve

DC24V 0.6A

其它规格可定做
Other can be customized

- 适用于 5 通径电液比例换向阀
- 螺纹连接，线圈可实现免停机更换
- 配备手动调整装置
- 线圈内孔 ϕ19，全塑封工艺

- Applicable to 5-way electro-hydraulic proportional directional valve
- Threaded connection, coil can be replaced without stopping
- Equipped with manual adjustment device
- Coil inner hole ϕ 19. All-plastic sealing process

外形及连接尺寸
Outline and connection dimensions

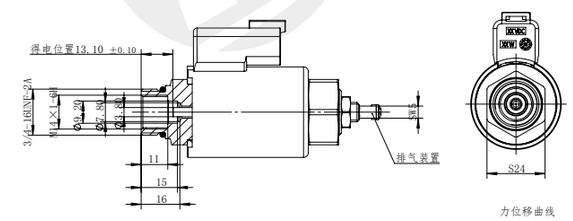

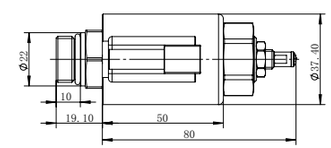

技术参数 /technical parameter		
环境温度 Ambient temperature	°C	-25~50
额定电压 Rated voltage	VDC	24
额定电流 Rated current	A	0.6
最大电流 Maximum current	A	0.68
额定电阻 Rated resistance	Ω	20.6
额定行程 Rated stroke	mm	2.1
全行程 Full stroke	mm	2.5
额定推力 Rated thrust	N	55
力滞环 Force hysteresis	%	≤ 4
电流滞环 Current hysteresis	%	≤ 4
重复精度 Repetition accuracy	%	≤ 1
工作油压 Working oil pressure	MPa	≤ 21
防护等级 Degree of protection		IP67
通电持续率 Power on duration	%	100
绝缘等级 Insulation class		H（180）
电气连接方式 Electrical connection mode		DT04-2P

力 - 位移特性曲线
F-S characteristic curve

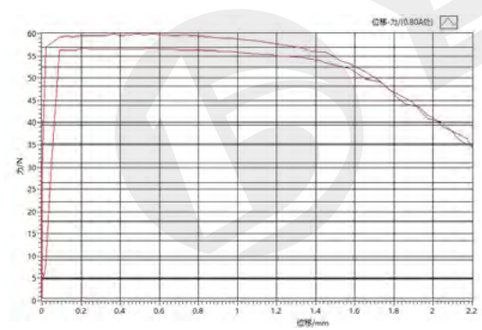

注意事项
matters needing attention

1. 首次使用或长期停机后启用，请先将系统内空气排净！
2. 可任意方向安装，建议水平安装。

1. After the first use or long-term shutdown, please exhaust the air in the system first!
2. It can be installed in any direction, and it is recommended to install horizontally.

样本数据来源于试验室环境，仅供参考，贵公司如需最新数据或有特殊需求，欢迎联系搏业液压工程师。
The sample data comes from the laboratory environment and is only for reference. If your company needs the latest data or has special needs, please contact Boye hydraulic engineer.

BYG07-37-05D

比例阀用电磁铁
Electromagnet for proportional valve

DC12V 1.8A

其它规格可定做
Other can be customized

- 适用于 5 通径电液比例换向阀
- 螺纹连接，线圈可实现免停机更换
- 配备手动调整装置
- 防尘防水设计
- 线圈内孔 ϕ19，全塑封工艺

- Applicable to 5-way electro-hydraulic proportional directional valve
- Threaded connection, coil can be replaced without stopping
- Equipped with manual adjustment device
- Dust and waterproof design
- Coil inner hole ϕ19. All-plastic sealing process

外形及连接尺寸
Outline and connection dimensions

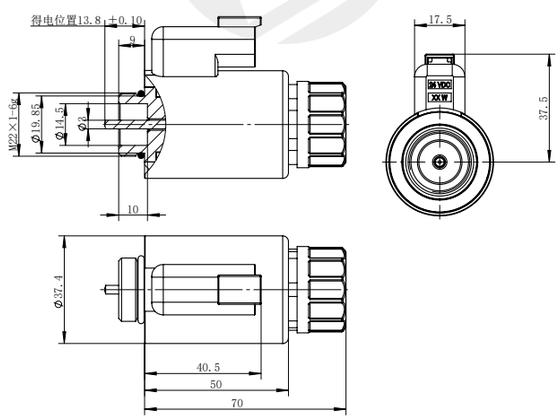

技术参数 /technical parameter		
环境温度 Ambient temperature	°C	-25~50
额定电压 Rated voltage	VDC	12
额定电流 Rated current	A	1.8
最大电流 Maximum current	A	3.41
额定电阻 Rated resistance	Ω	2.25
额定行程 Rated stroke	mm	2.5
全行程 Full stroke	mm	5
额定推力 Rated thrust	N	40
力滞环 Force hysteresis	%	≤ 5
电流滞环 Current hysteresis	%	≤ 3
重复精度 Repetition accuracy	%	≤ 1
工作油压 Working oil pressure	MPa	≤ 21
防护等级 Degree of protection		IP67
通电持续率 Power on duration	%	100
绝缘等级 Insulation class		H（180）
电气连接方式 Electrical connection mode		DT04-2P

力 - 位移特性曲线
F-S characteristic curve

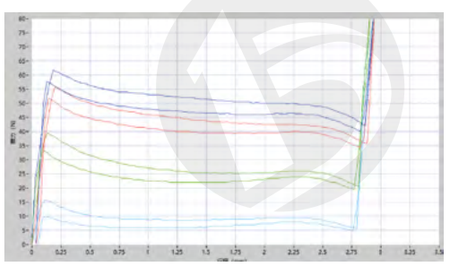

注意事项
matters needing attention

1. 首次使用或长期停机后启用，请先将系统内空气排净！
2. 可任意方向安装，建议水平安装。

1. After the first use or long-term shutdown, please exhaust the air in the system first!
2. It can be installed in any direction, and it is recommended to install horizontally.

样本数据来源于试验室环境，仅供参考，贵公司如需最新数据或有特殊需求，欢迎联系搏业液压工程师。
The sample data comes from the laboratory environment and is only for reference. If your company needs the latest data or has special needs, please contact Boye hydraulic engineer.

BYG07-37-06MD

比例阀用电磁铁
Electromagnet for proportional valve

DC12V 1.2A
DC24V 0.6A

其它规格可定做
Other can be customized

- 适用于 FCV85 电液比例叉车阀
- 螺纹连接，线圈可实现免停机更换
- 配备手动调整装置（内置弹簧）
- 线圈内孔 ϕ19，全塑封工艺

- Suitable for FCV85 electro-hydraulic proportional forklift valve
- Threaded connection, coil can be replaced without stopping
- Equipped with manual adjustment device (built-in spring)
- Coil inner hole ϕ 19. All-plastic sealing process

外形及连接尺寸
Outline and connection dimensions

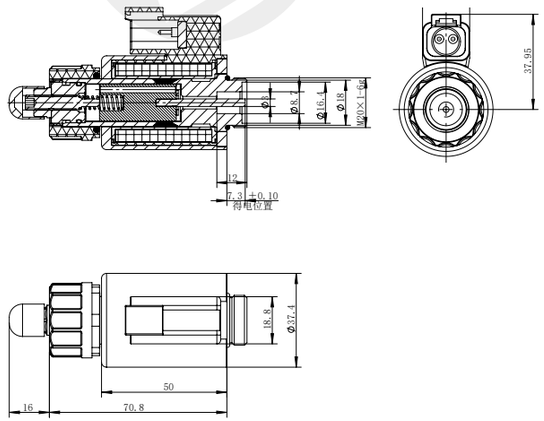

技术参数 /technical parameter			
环境温度 Ambient temperature	°C	-25~50	
额定电压 Rated voltage	VDC	12	24
额定电流 Rated current	A	1.2	0.60
最大电流 Maximum current	A	1.6	0.85
额定电阻 Rated resistance	Ω	4.8	18
额定行程 Rated stroke	mm	3.3	
全行程 Full stroke	mm	6.5	
额定推力 Rated thrust	N	32	
力滞环 Force hysteresis	%	≤ 4	
电流滞环 Current hysteresis	%	≤ 4	
重复精度 Repetition accuracy	%	≤ 1	
工作油压 Working oil pressure	MPa	≤ 21	
防护等级 Degree of protection		IP67	
通电持续率 Power on duration	%	100	
绝缘等级 Insulation class		H（180）	
电气连接方式 Electrical connection mode		DT04-2P	

力 - 位移特性曲线
F-S characteristic curve

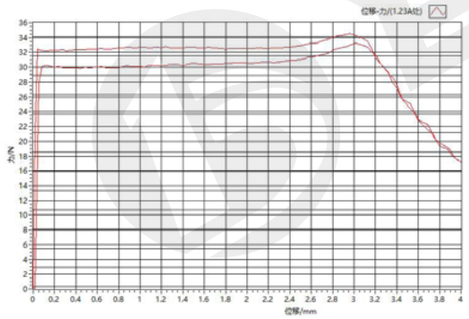

注意事项
matters needing attention

1. 首次使用或长期停机后启用，请先将系统内空气排净！
2. 可任意方向安装，建议水平安装。

1. After the first use or long-term shutdown, please exhaust the air in the system first!
2. It can be installed in any direction, and it is recommended to install horizontally.

样本数据来源于试验室环境，仅供参考，贵公司如需最新数据或有特殊需求，欢迎联系搏业液压工程师。
The sample data comes from the laboratory environment and is only for reference. If your company needs the latest data or has special needs, please contact Boye hydraulic engineer.

BYG07-45-01D

比例阀用电磁铁
Electromagnet for proportional valve

DC12V 1.4A
DC24V 0.7A

其它规格可定做
Other can be customized

- 适用于电液比例螺纹插装阀
- 螺纹连接，线圈可实现免停机更换
- 配备手动调整装置
- 防尘防水设计
- 线圈内孔 ϕ23，全塑封工艺

- Applicable to electro-hydraulic proportional threaded cartridge valves
- Threaded connection, coil can be replaced without stopping
- Equipped with manual adjustment device
- Dust and waterproof design
- Coil inner hole ϕ 23. All-plastic sealing process

外形及连接尺寸
Outline and connection dimensions

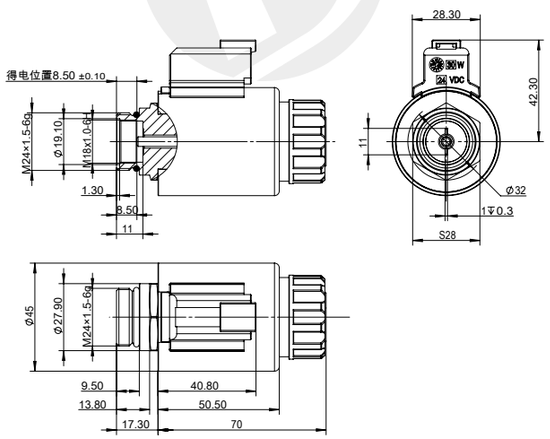

技术参数 /technical parameter			
环境温度 Ambient temperature	°C	-25~50	
额定电压 Rated voltage	VDC	12	24
额定电流 Rated current	A	1.4	0.7
最大电流 Maximum current	A	1.5	0.8
额定电阻 Rated resistance	Ω	5.6	22.5
额定行程 Rated stroke	mm	2.8	
全行程 Full stroke	mm	2.8	
额定推力 Rated thrust	N	50	
力滞环 Force hysteresis	%	≤ 4	
电流滞环 Current hysteresis	%	≤ 4	
重复精度 Repetition accuracy	%	≤ 1	
工作油压 Working oil pressure	MPa	≤ 21	
防护等级 Degree of protection		IP67	
通电持续率 Power on duration	%	100	
绝缘等级 Insulation class		H（180）	
电气连接方式 Electrical connection mode		DT04-2P	

力 - 位移特性曲线
F-S characteristic curve

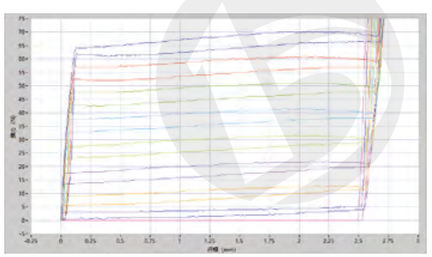

注意事项
matters needing attention

1. 首次使用或长期停机后启用，请先将系统内空气排净！
2. 可任意方向安装，建议水平安装。

1. After the first use or long-term shutdown, please exhaust the air in the system first!
2. It can be installed in any direction, and it is recommended to install horizontally.

样本数据来源于试验室环境，仅供参考，贵公司如需最新数据或有特殊需求，欢迎联系搏业液压工程师。
The sample data comes from the laboratory environment and is only for reference. If your company needs the latest data or has special needs, please contact Boye hydraulic engineer.

BYG07-45-02D

比例阀用电磁铁
Electromagnet for proportional valve

DC12V 1.4A
DC24V 0.7A

其它规格可定做
Other can be customized

- 适用于电液比例螺纹插装阀
- 螺纹连接，线圈可实现免停机更换
- 线圈内孔 ϕ23，全塑封工艺

- Applicable to electro-hydraulic proportional threaded cartridge valves
- Threaded connection, coil can be replaced without stopping
- Coil inner hole ϕ 23. All-plastic sealing process

外形及连接尺寸
Outline and connection dimensions

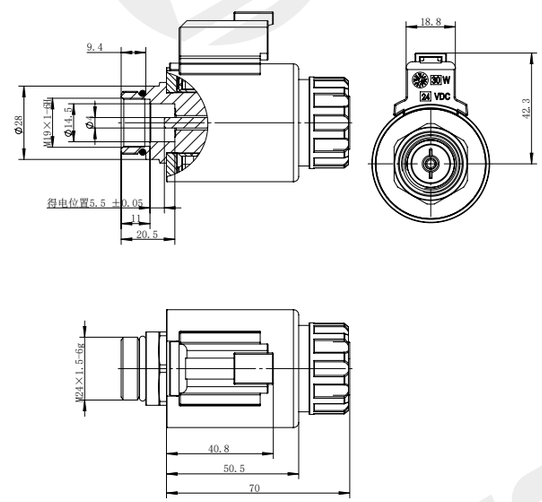

技术参数 /technical parameter			
环境温度 Ambient temperature	°C	-25~50	
额定电压 Rated voltage	VDC	12	24
额定电流 Rated current	A	1.4	0.7
最大电流 Maximum current	A	1.5	0.8
额定电阻 Rated resistance	Ω	5.6	22.5
额定行程 Rated stroke	mm	2.8	
全行程 Full stroke	mm	2.8	
额定推力 Rated thrust	N	50	
力滞环 Force hysteresis	%	≤ 4	
电流滞环 Current hysteresis	%	≤ 4	
重复精度 Repetition accuracy	%	≤ 1	
工作油压 Working oil pressure	MPa	≤ 21	
防护等级 Degree of protection		IP67	
通电持续率 Power on duration	%	100	
绝缘等级 Insulation class		H（180）	
电气连接方式 Electrical connection mode		DT04-2P	

力 - 位移特性曲线
F-S characteristic curve

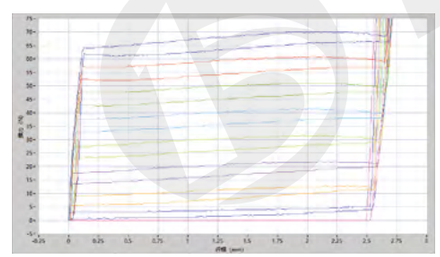

注意事项
matters needing attention

1. 首次使用或长期停机后启用，请先将系统内空气排净！
2. 可任意方向安装，建议水平安装。

1. After the first use or long-term shutdown, please exhaust the air in the system first!
2. It can be installed in any direction, and it is recommended to install horizontally.

样本数据来源于试验室环境，仅供参考，贵公司如需最新数据或有特殊需求，欢迎联系搏业液压工程师。
The sample data comes from the laboratory environment and is only for reference. If your company needs the latest data or has special needs, please contact Boye hydraulic engineer.

BYG07-45-03G

比例阀用电磁铁
Electromagnet for proportional valve

DC12V 1.8A

其它规格可定做
Other can be customized

- 适用于电液比例螺纹插装阀
- 螺纹连接，线圈可实现免停机更换
- 线圈内孔 ϕ23，全塑封工艺

- Applicable to electro-hydraulic proportional threaded cartridge valves
- Threaded connection, coil can be replaced without stopping
- Coil inner hole ϕ 23. All-plastic sealing process

外形及连接尺寸
Outline and connection dimensions

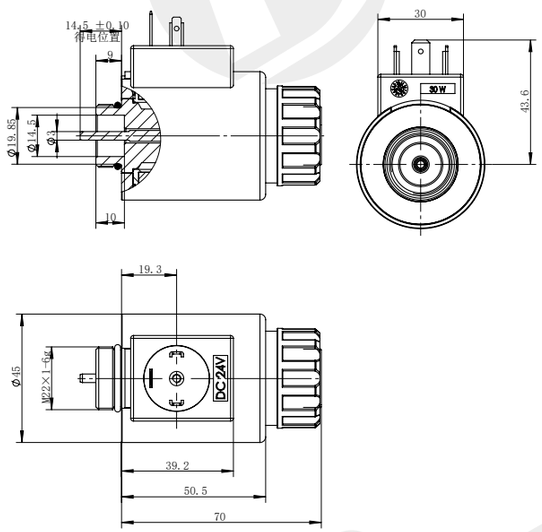

技术参数 /technical parameter		
环境温度 Ambient temperature	°C	-25~50
额定电压 Rated voltage	VDC	12
额定电流 Rated current	A	1.8
最大电流 Maximum current	A	2.33
额定电阻 Rated resistance	Ω	3.30
额定行程 Rated stroke	mm	3.2
全行程 Full stroke	mm	6.7
额定推力 Rated thrust	N	80
力滞环 Force hysteresis	%	≤ 4
电流滞环 Current hysteresis	%	≤ 4
重复精度 Repetition accuracy	%	≤ 1
工作油压 Working oil pressure	MPa	≤ 21
防护等级 Degree of protection		IP65
通电持续率 Power on duration	%	100
绝缘等级 Insulation class		H（180）
电气连接方式 Electrical connection mode		DIN43650

力 - 位移特性曲线
F-S characteristic curve

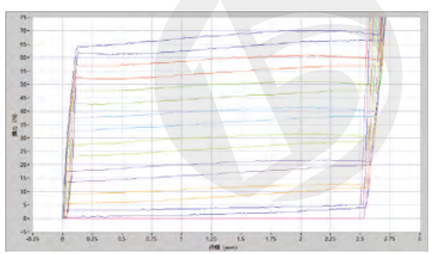

注意事项
matters needing attention

1. 首次使用或长期停机后启用，请先将系统内空气排净！
2. 可任意方向安装，建议水平安装。

1. After the first use or long-term shutdown, please exhaust the air in the system first!
2. It can be installed in any direction, and it is recommended to install horizontally.

样本数据来源于试验室环境，仅供参考，贵公司如需最新数据或有特殊需求，欢迎联系搏业液压工程师。
The sample data comes from the laboratory environment and is only for reference. If your company needs the latest data or has special needs, please contact Boye hydraulic engineer.

BYG08-33-01MD

比例阀用电磁铁
Electromagnet for proportional valve

DC12V 1.2A
DC24V 0.6A

其它规格可定做
Other can be customized

- 适用于 CP558-24 系列电液比例螺纹插装阀
- 螺纹连接，线圈可实现免停机更换
- 配备手动调整装置
- 线圈内孔 ϕ13，全塑封工艺

- Suitable for CP558-24 Series electro-hydraulic proportional threaded cartridge valves
- Threaded connection, coil can be replaced without stopping
- Equipped with manual adjustment device
- Coil inner hole ϕ13, full plastic sealing process

外形及连接尺寸
Outline and connection dimensions

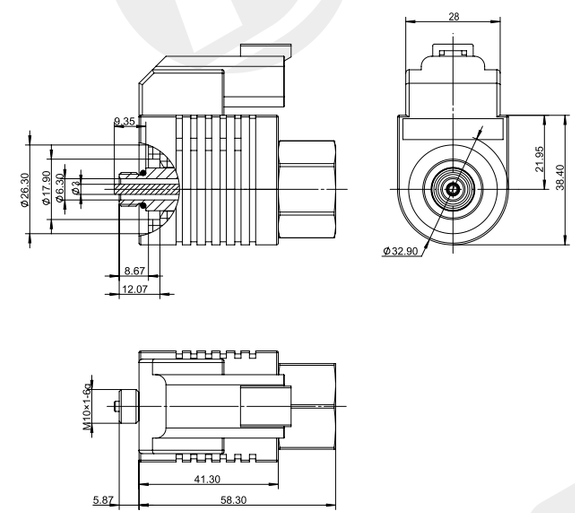

技术参数 /technical parameter			
环境温度 Ambient temperature	°C	-25~50	
额定电压 Rated voltage	VDC	12	24
额定电流 Rated current	A	1.2	0.6
最大电流 Maximum current	A	1.36	0.68
额定电阻 Rated resistance	Ω	8.5	34
额定行程 Rated stroke	mm	1.5	
全行程 Full stroke	mm	2.5	
额定推力 Rated thrust	N	22	
力滞环 Force hysteresis	%	≤ 4	
电流滞环 Current hysteresis	%	≤ 4	
重复精度 Repetition accuracy	%	≤ 1	
工作油压 Working oil pressure	MPa	≤ 21	
防护等级 Degree of protection		IP67	
通电持续率 Power on duration	%	100	
绝缘等级 Insulation class		H（180）	
电气连接方式 Electrical connection mode		DT04-2P	

力 - 位移特性曲线
F-S characteristic curve

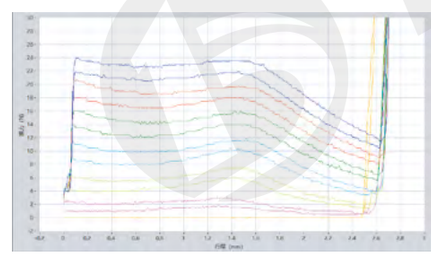

注意事项
matters needing attention

1. 首次使用或长期停机后启用，请先将系统内空气排净！
2. 可任意方向安装，建议水平安装。

1. After the first use or long-term shutdown, please exhaust the air in the system first!
2. It can be installed in any direction, and it is recommended to install horizontally.

样本数据来源于试验室环境，仅供参考，贵公司如需最新数据或有特殊需求，欢迎联系搏业液压工程师。
The sample data comes from the laboratory environment and is only for reference. If your company needs the latest data or has special needs, please contact Boye hydraulic engineer.

BYG09-13-01MG

比例阀用电磁铁
Electromagnet for proportional valve

DC13V 0.9A

其它规格可定做
Other can be customized

- 适用于电液比例螺纹插装阀
- 螺纹连接，线圈可实现免停机更换
- 配备手动调整装置
- 线圈内孔 ϕ13

- Suitable for electro-hydraulic proportional threaded cartridge valves
- Threaded connection, coil can be replaced without stopping
- Equipped with manual adjustment device
- Coil inner hole ϕ 13

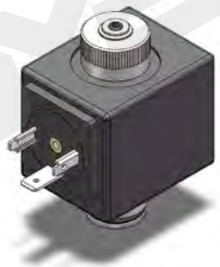

外形及连接尺寸
Outline and connection dimensions

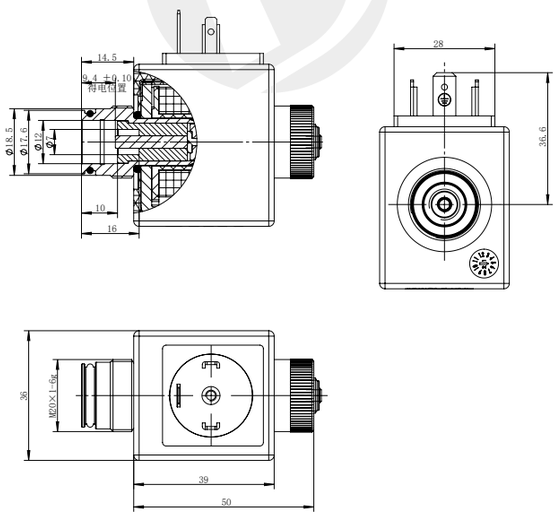

技术参数 /technical parameter		
环境温度 Ambient temperature	℃	-25~50
额定电压 Rated voltage	VDC	13
额定电流 Rated current	A	0.9
最大电流 Maximum current	A	1.54
额定电阻 Rated resistance	Ω	8.45
额定行程 Rated stroke	mm	2.1
全行程 Full stroke	mm	2.5
额定推力 Rated thrust	N	18
力滞环 Force hysteresis	%	≤ 4
电流滞环 Current hysteresis	%	≤ 4
重复精度 Repetition accuracy	%	≤ 1
工作油压 Working oil pressure	MPa	≤ 21
防护等级 Degree of protection		IP65
通电持续率 Power on duration	%	100
绝缘等级 Insulation class		H（180）
电气连接方式 Electrical connection mode		DIN43650

力 - 位移特性曲线
F-S characteristic curve

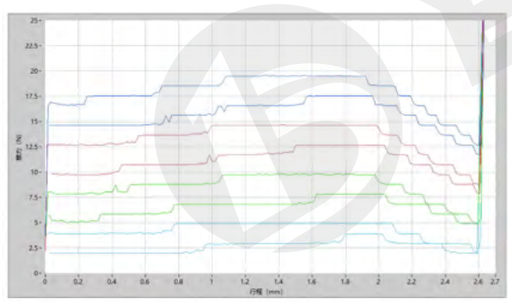

注意事项
matters needing attention

1. 首次使用或长期停机后启用，请先将系统内空气排净！
2. 可任意方向安装，建议水平安装。

1. After the first use or long-term shutdown, please exhaust the air in the system first!
2. It can be installed in any direction, and it is recommended to install horizontally.

样本数据来源于试验室环境，仅供参考，贵公司如需最新数据或有特殊需求，欢迎联系搏业液压工程师。
The sample data comes from the laboratory environment and is only for reference. If your company needs the latest data or has special needs, please contact Boye hydraulic engineer.

BYG09-16-01MG

比例阀用电磁铁
Electromagnet for proportional valve

DC12V 1.9A
DC24V 0.95A

其它规格可定做
Other can be customized

- 适用于电液比例螺纹插装阀
- 螺纹连接，线圈可实现免停机更换
- 配备手动调整装置
- 线圈内孔 ϕ13，全塑封工艺

- Suitable for electro-hydraulic proportional threaded cartridge valves
- Threaded connection, coil can be replaced without stopping
- Equipped with manual adjustment device
- Coil inner hole ϕ13, full plastic sealing process

外形及连接尺寸
Outline and connection dimensions

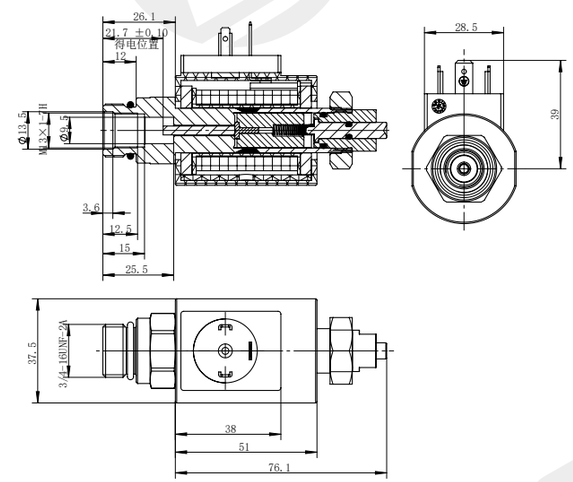

技术参数 /technical parameter			
环境温度 Ambient temperature	℃	-25~50	
额定电压 Rated voltage	VDC	12	24
额定电流 Rated current	A	1.9	0.95
最大电流 Maximum current	A	2.26	1.17
额定电阻 Rated resistance	Ω	5.3	20.4
额定行程 Rated stroke	mm	2.6	
全行程 Full stroke	mm	3.6	
额定推力 Rated thrust	N	50	
力滞环 Force hysteresis	%	≤ 4	
电流滞环 Current hysteresis	%	≤ 4	
重复精度 Repetition accuracy	%	≤ 1	
工作油压 Working oil pressure	MPa	≤ 21	
防护等级 Degree of protection		IP65	
通电持续率 Power on duration	%	100	
绝缘等级 Insulation class		H（180）	
电气连接方式 Electrical connection mode		DIN43650	

力 - 位移特性曲线
F-S characteristic curve

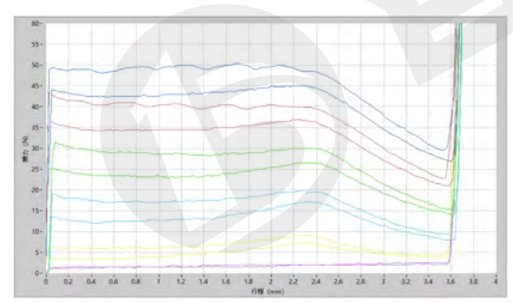

注意事项
matters needing attention

1. 首次使用或长期停机后启用，请先将系统内空气排净！
2. 可任意方向安装，建议水平安装。

1. After the first use or long-term shutdown, please exhaust the air in the system first!
2. It can be installed in any direction, and it is recommended to install horizontally.

样本数据来源于试验室环境，仅供参考，贵公司如需最新数据或有特殊需求，欢迎联系搏业液压工程师。
The sample data comes from the laboratory environment and is only for reference. If your company needs the latest data or has special needs, please contact Boye hydraulic engineer.

TEL:0574-86587131 www.nbboye.net

BYG10-13-01D

比例阀用电磁铁
Electromagnet for proportional valve

DC12V 16W
DC24V 16W

其它规格可定做
Other can be customized

- 适用于 SP08-20 系列电液比例螺纹插装阀
- 螺纹连接，线圈可实现免停机更换
- 线圈内孔 ϕ13，全塑封工艺

- Suitable for sp08-20 series electro-hydraulic proportional screw-in cartridge valves
- Threaded connection, coil can be replaced without stopping
- Coil inner hole ϕ13. All-plastic sealing process

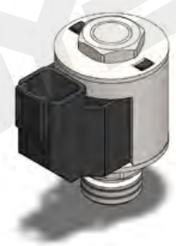

外形及连接尺寸
Outline and connection dimensions

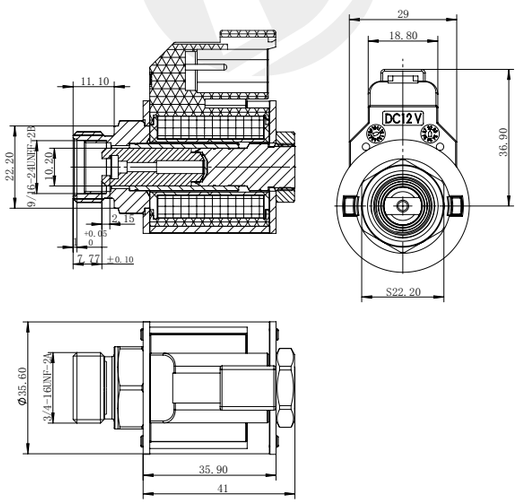

技术参数 /technical parameter			
环境温度 Ambient temperature	℃	-25~50	
额定电压 Rated voltage	VDC	12	24
额定功率 Rated power	W	16	
额定电阻 Rated resistance	Ω	8.80	36.2
额定行程 Rated stroke	mm	2.8	
额定推力 Rated thrust	N	20	
力滞环 Force hysteresis	%	≤ 4	
电流滞环 Current hysteresis	%	≤ 4	
重复精度 Repetition accuracy	%	≤ 1	
工作油压 Working oil pressure	MPa	≤ 21	
防护等级 Degree of protection		IP67	
通电持续率 Power on duration	%	100	
绝缘等级 Insulation class		H（180）	
电气连接方式 Electrical connection mode		DT04-2P	

力 - 位移特性曲线
F-S characteristic curve

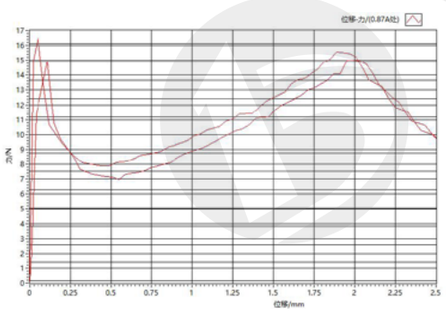

注意事项
matters needing attention

1. 首次使用或长期停机后启用，请先将系统内空气排净！
2. 可任意方向安装，建议水平安装。

1. After the first use or long-term shutdown, please exhaust the air in the system first!
2. It can be installed in any direction, and it is recommended to install horizontally.

样本数据来源于试验室环境，仅供参考，贵公司如需最新数据或有特殊需求，欢迎联系搏业液压工程师。
The sample data comes from the laboratory environment and is only for reference. If your company needs the latest data or has special needs, please contact Boye hydraulic engineer.

BYG10-13-01MD

比例阀用电磁铁
Electromagnet for proportional valve

DC12V 16W
DC24V 16W

其它规格可定做
Other can be customized

- 适用于 SP08-20M 系列电液比例螺纹插装阀
- 螺纹连接，线圈可实现免停机更换
- 配备手动调整装置
- 线圈内孔 ϕ13，全塑封工艺

- Suitable for sp08-20M series electro-hydraulic proportional screw-in cartridge valves
- Threaded connection, coil can be replaced without stopping
- Equipped with manual adjustment device
- Coil inner hole ϕ13, full plastic sealing process

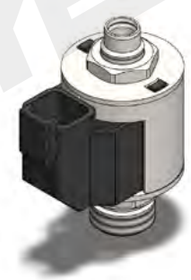

外形及连接尺寸
Outline and connection dimensions

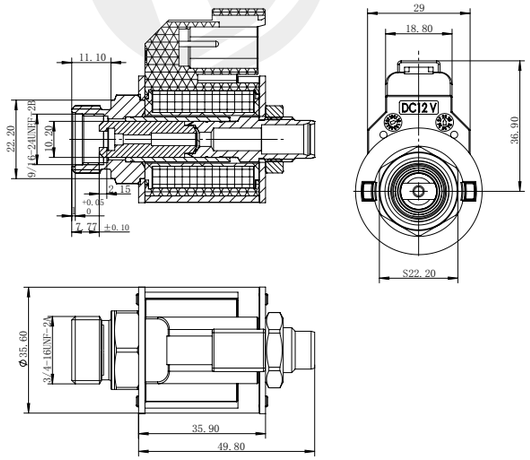

技术参数 /technical parameter			
环境温度 Ambient temperature	℃	-25~50	
额定电压 Rated voltage	VDC	12	24
额定功率 Rated power	W	16	
额定电阻 Rated resistance	Ω	8.80	36.2
额定行程 Rated stroke	mm	2.8	
额定推力 Rated thrust	N	20	
力滞环 Force hysteresis	%	≤ 4	
电流滞环 Current hysteresis	%	≤ 4	
重复精度 Repetition accuracy	%	≤ 1	
工作油压 Working oil pressure	MPa	≤ 21	
防护等级 Degree of protection		IP67	
通电持续率 Power on duration	%	100	
绝缘等级 Insulation class		H（180）	
电气连接方式 Electrical connection mode		DT04-2P	

力 - 位移特性曲线
F-S characteristic curve

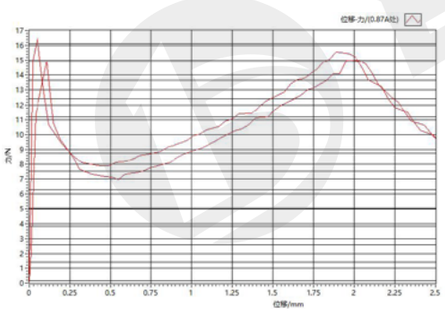

注意事项
matters needing attention

1. 首次使用或长期停机后启用，请先将系统内空气排净！
2. 可任意方向安装，建议水平安装。

1. After the first use or long-term shutdown, please exhaust the air in the system first!
2. It can be installed in any direction, and it is recommended to install horizontally.

样本数据来源于试验室环境，仅供参考，贵公司如需最新数据或有特殊需求，欢迎联系搏业液压工程师。
The sample data comes from the laboratory environment and is only for reference. If your company needs the latest data or has special needs, please contact Boye hydraulic engineer.

BYG10-16-01D

比例阀用电磁铁
Electromagnet for proportional valve

DC12V 20W
DC24V 20W

其它规格可定做
Other can be customized

- 适用于 SP10-20 系列电液比例螺纹插装阀
- 螺纹连接，线圈可实现免停机更换
- 线圈内孔 ϕ16，全塑封工艺

- Suitable for sp10-20 series electro-hydraulic proportional screw-in cartridge valves
- Threaded connection, coil can be replaced without stopping
- Coil inner hole ϕ16. All-plastic sealing process

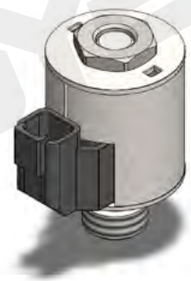

外形及连接尺寸
Outline and connection dimensions

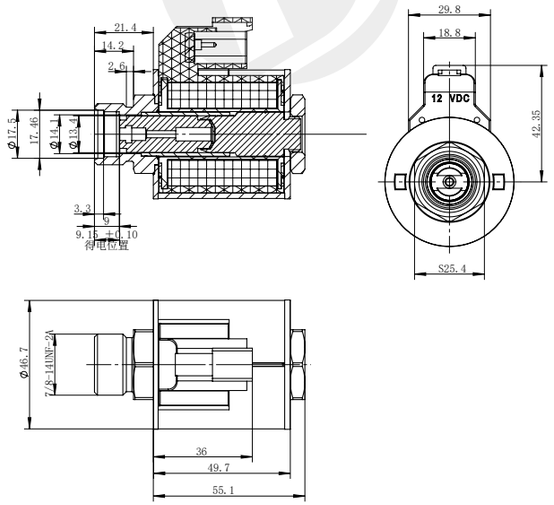

技术参数 /technical parameter			
环境温度 Ambient temperature	°C	-25~50	
额定电压 Rated voltage	VDC	12	24
额定功率 Rated power	W	20	
额定电阻 Rated resistance	Ω	7.10	28.30
额定行程 Rated stroke	mm	3.5	
额定推力 Rated thrust	N	25	
力滞环 Force hysteresis	%	≤ 4	
电流滞环 Current hysteresis	%	≤ 4	
重复精度 Repetition accuracy	%	≤ 1	
工作油压 Working oil pressure	MPa	≤ 25	
防护等级 Degree of protection		IP67	
通电持续率 Power on duration	%	100	
绝缘等级 Insulation class		H（180）	
电气连接方式 Electrical connection mode		DT04-2P	

力 - 位移特性曲线
F-S characteristic curve

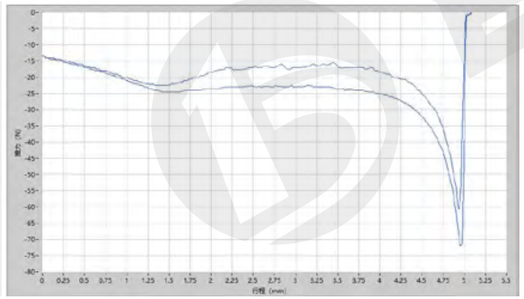

注意事项
matters needing attention

1. 首次使用或长期停机后启用，请先将系统内空气排净！
2. 可任意方向安装，建议水平安装。

1. After the first use or long-term shutdown, please exhaust the air in the system first!
2. It can be installed in any direction, and it is recommended to install horizontally.

样本数据来源于试验室环境，仅供参考，贵公司如需最新数据或有特殊需求，欢迎联系搏业液压工程师。
The sample data comes from the laboratory environment and is only for reference. If your company needs the latest data or has special needs, please contact Boye hydraulic engineer.

BYG10-16-01MD

比例阀用电磁铁
Electromagnet for proportional valve

DC12V 20W
DC24V 20W

其它规格可定做
Other can be customized

- 适用于 SP10-20M 系列电液比例螺纹插装阀
- 螺纹连接，线圈可实现免停机更换
- 配备手动调整装置
- 线圈内孔 ϕ16，全塑封工艺

- Suitable for sp10-20M series electro-hydraulic proportional screw-in cartridge valves
- Threaded connection, coil can be replaced without stopping
- Equipped with manual adjustment device
- Coil inner hole ϕ16, full plastic sealing process

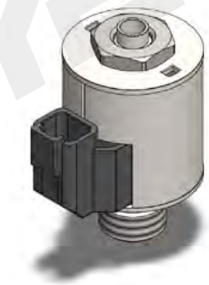

外形及连接尺寸
Outline and connection dimensions

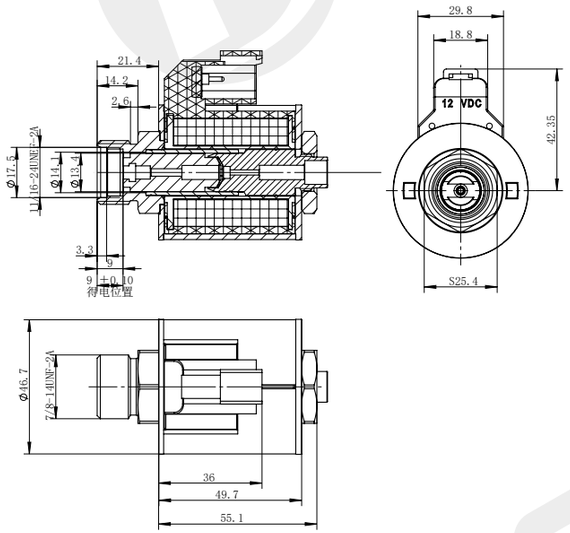

技术参数 /technical parameter			
环境温度 Ambient temperature	°C	-25~50	
额定电压 Rated voltage	VDC	12	24
额定功率 Rated power	W	20	
额定电阻 Rated resistance	Ω	7.10	28.30
额定行程 Rated stroke	mm	3.5	
额定推力 Rated thrust	N	25	
力滞环 Force hysteresis	%	≤ 4	
电流滞环 Current hysteresis	%	≤ 4	
重复精度 Repetition accuracy	%	≤ 1	
工作油压 Working oil pressure	MPa	≤ 25	
防护等级 Degree of protection		IP67	
通电持续率 Power on duration	%	100	
绝缘等级 Insulation class		H（180）	
电气连接方式 Electrical connection mode		DT04-2P	

力 - 位移特性曲线
F-S characteristic curve

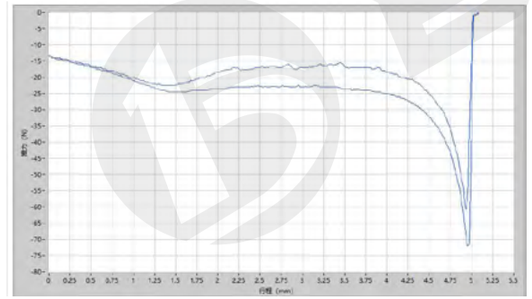

注意事项
matters needing attention

1. 首次使用或长期停机后启用，请先将系统内空气排净！
2. 可任意方向安装，建议水平安装。

1. After the first use or long-term shutdown, please exhaust the air in the system first!
2. It can be installed in any direction, and it is recommended to install horizontally.

样本数据来源于试验室环境，仅供参考，贵公司如需最新数据或有特殊需求，欢迎联系搏业液压工程师。
The sample data comes from the laboratory environment and is only for reference. If your company needs the latest data or has special needs, please contact Boye hydraulic engineer.

BYG10-16-02D

比例阀用电磁铁
Electromagnet for proportional valve

DC12V 20W
DC24V 20W

其它规格可定做
Other can be customized

- 适用于 SP12-20 系列电液比例螺纹插装阀
- 螺纹连接，线圈可实现免停机更换
- 线圈内孔 ϕ16，全塑封工艺

- Suitable for sp12-20 series electro-hydraulic proportional screw-in cartridge valves
- Threaded connection, coil can be replaced without stopping
- Coil inner hole ϕ16. All-plastic sealing process

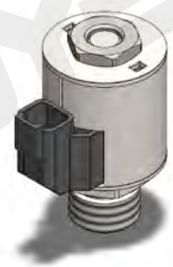

外形及连接尺寸
Outline and connection dimensions

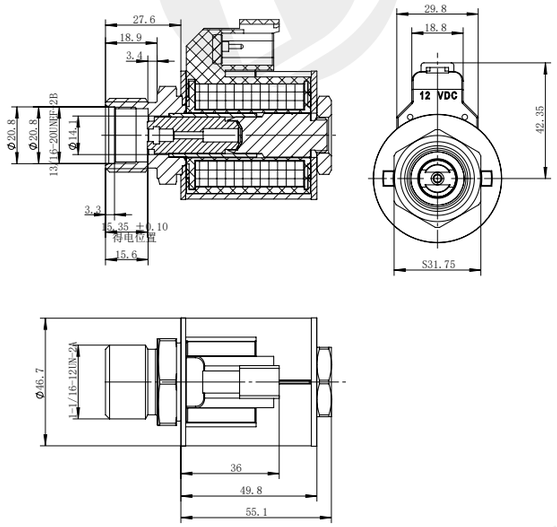

技术参数 /technical parameter			
环境温度 Ambient temperature	°C	-25~50	
额定电压 Rated voltage	VDC	12	24
额定功率 Rated power	W	20	
额定电阻 Rated resistance	Ω	7.10	28.30
额定行程 Rated stroke	mm	3.5	
额定推力 Rated thrust	N	25	
力滞环 Force hysteresis	%	≤ 4	
电流滞环 Current hysteresis	%	≤ 4	
重复精度 Repetition accuracy	%	≤ 1	
工作油压 Working oil pressure	MPa	≤ 25	
防护等级 Degree of protection		IP67	
通电持续率 Power on duration	%	100	
绝缘等级 Insulation class		H（180）	
电气连接方式 Electrical connection mode		DT04-2P	

力 - 位移特性曲线
F-S characteristic curve

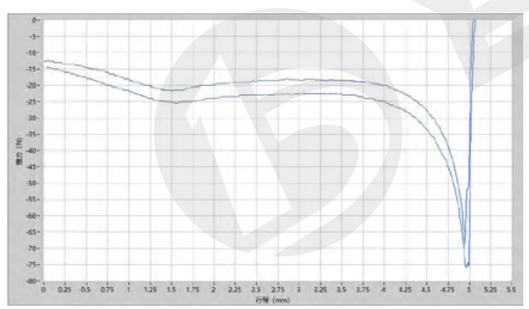

注意事项
matters needing attention

1. 首次使用或长期停机后启用，请先将系统内空气排净！
2. 可任意方向安装，建议水平安装。

1. After the first use or long-term shutdown, please exhaust the air in the system first!
2. It can be installed in any direction, and it is recommended to install horizontally.

样本数据来源于试验室环境，仅供参考，贵公司如需最新数据或有特殊需求，欢迎联系搏业液压工程师。
The sample data comes from the laboratory environment and is only for reference. If your company needs the latest data or has special needs, please contact Boye hydraulic engineer.

BYG10-16-02MD

比例阀用电磁铁
Electromagnet for proportional valve

DC12V 20W
DC24V 20W

其它规格可定做
Other can be customized

- 适用于 SP12-20M 系列电液比例螺纹插装阀
- 螺纹连接，线圈可实现免停机更换
- 配备手动调整装置
- 线圈内孔 ϕ16，全塑封工艺

- Suitable for sp12-20M series electro-hydraulic proportional screw-in cartridge valves
- Threaded connection, coil can be replaced without stopping
- Equipped with manual adjustment device
- Coil inner hole ϕ16, full plastic sealing process

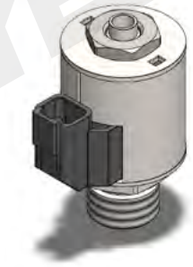

外形及连接尺寸
Outline and connection dimensions

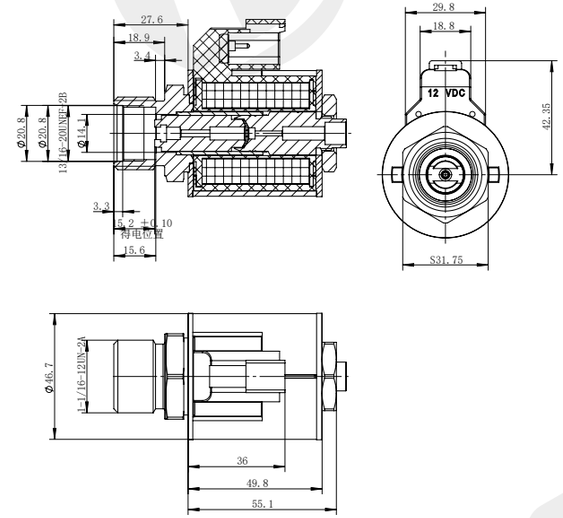

技术参数 /technical parameter			
环境温度 Ambient temperature	°C	-25~50	
额定电压 Rated voltage	VDC	12	24
额定功率 Rated power	W	20	
额定电阻 Rated resistance	Ω	7.10	28.30
额定行程 Rated stroke	mm	3.5	
额定推力 Rated thrust	N	25	
力滞环 Force hysteresis	%	≤ 4	
电流滞环 Current hysteresis	%	≤ 4	
重复精度 Repetition accuracy	%	≤ 1	
工作油压 Working oil pressure	MPa	≤ 25	
防护等级 Degree of protection		IP67	
通电持续率 Power on duration	%	100	
绝缘等级 Insulation class		H（180）	
电气连接方式 Electrical connection mode		DT04-2P	

力 - 位移特性曲线
F-S characteristic curve

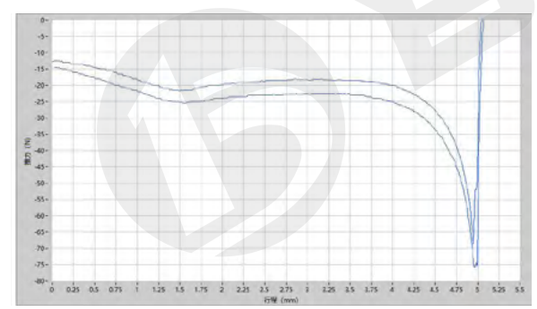

注意事项
matters needing attention

1. 首次使用或长期停机后启用，请先将系统内空气排净！
2. 可任意方向安装，建议水平安装。

1. After the first use or long-term shutdown, please exhaust the air in the system first!
2. It can be installed in any direction, and it is recommended to install horizontally.

样本数据来源于试验室环境，仅供参考，贵公司如需最新数据或有特殊需求，欢迎联系搏业液压工程师。
The sample data comes from the laboratory environment and is only for reference. If your company needs the latest data or has special needs, please contact Boye hydraulic engineer.

TEL:0574-86587131 www.nbboye.net

BYG10-16-03D

比例阀用电磁铁
Electromagnet for proportional valve

DC12V 20W
DC24V 20W

其它规格可定做
Other can be customized

- 适用于 SP16-20 系列电液比例螺纹插装阀
- 螺纹连接，线圈可实现免停机更换
- 线圈内孔 ϕ16，全塑封工艺

- Suitable for sp16-20 series electro-hydraulic proportional screw-in cartridge valves
- Threaded connection, coil can be replaced without stopping
- Coil inner hole ϕ16. All-plastic sealing process

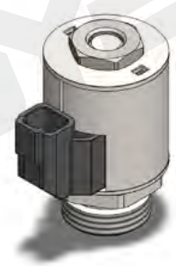

外形及连接尺寸
Outline and connection dimensions

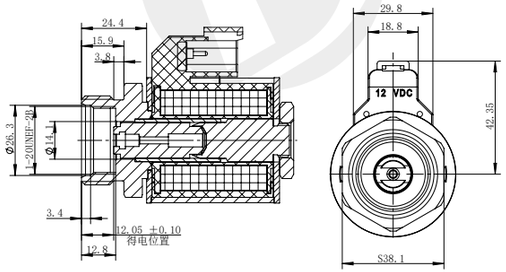

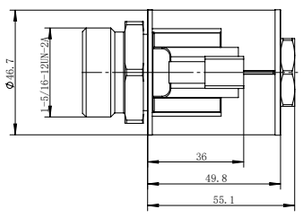

技术参数 /technical parameter			
环境温度 Ambient temperature	°C	-25~50	
额定电压 Rated voltage	VDC	12	24
额定功率 Rated power	W	20	
额定电阻 Rated resistance	Ω	7.10	28.30
额定行程 Rated stroke	mm	3.5	
额定推力 Rated thrust	N	25	
力滞环 Force hysteresis	%	≤ 4	
电流滞环 Current hysteresis	%	≤ 4	
重复精度 Repetition accuracy	%	≤ 1	
工作油压 Working oil pressure	MPa	≤ 25	
防护等级 Degree of protection		IP67	
通电持续率 Power on duration	%	100	
绝缘等级 Insulation class		H（180）	
电气连接方式 Electrical connection mode		DT04-2P	

力 - 位移特性曲线
F-S characteristic curve

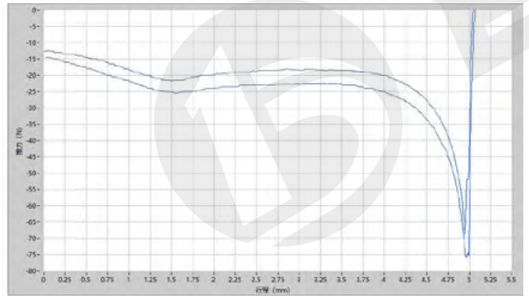

注意事项
matters needing attention

1. 首次使用或长期停机后启用，请先将系统内空气排净！
2. 可任意方向安装，建议水平安装。

1. After the first use or long-term shutdown, please exhaust the air in the system first!
2. It can be installed in any direction, and it is recommended to install horizontally.

样本数据来源于试验室环境，仅供参考，贵公司如需最新数据或有特殊需求，欢迎联系搏业液压工程师。
The sample data comes from the laboratory environment and is only for reference. If your company needs the latest data or has special needs, please contact Boye hydraulic engineer.

BYG10-16-03MD

比例阀用电磁铁
Electromagnet for proportional valve

DC12V 20W
DC24V 20W

其它规格可定做
Other can be customized

- 适用于 SP16-20M 系列电液比例螺纹插装阀
- 螺纹连接，线圈可实现免停机更换
- 配备手动调整装置
- 线圈内孔 ϕ16，全塑封工艺

- Suitable for sp16-20M series electro-hydraulic proportional screw-in cartridge valves
- Threaded connection, coil can be replaced without stopping
- Equipped with manual adjustment device
- Coil inner hole ϕ16, full plastic sealing process

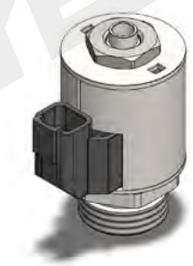

外形及连接尺寸
Outline and connection dimensions

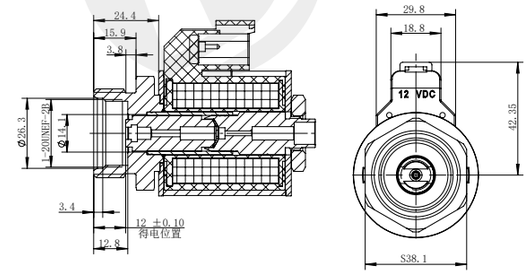

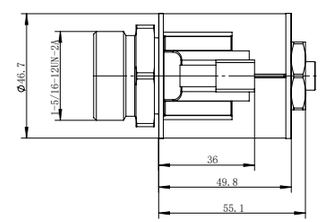

技术参数 /technical parameter			
环境温度 Ambient temperature	°C	-25~50	
额定电压 Rated voltage	VDC	12	24
额定功率 Rated power	W	20	
额定电阻 Rated resistance	Ω	7.10	28.30
额定行程 Rated stroke	mm	3.5	
额定推力 Rated thrust	N	25	
力滞环 Force hysteresis	%	≤ 4	
电流滞环 Current hysteresis	%	≤ 4	
重复精度 Repetition accuracy	%	≤ 1	
工作油压 Working oil pressure	MPa	≤ 25	
防护等级 Degree of protection		IP67	
通电持续率 Power on duration	%	100	
绝缘等级 Insulation class		H（180）	
电气连接方式 Electrical connection mode		DT04-2P	

力 - 位移特性曲线
F-S characteristic curve

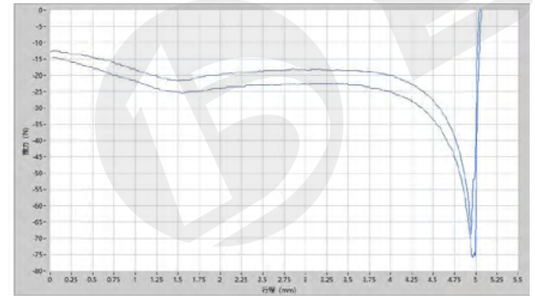

注意事项
matters needing attention

1. 首次使用或长期停机后启用，请先将系统内空气排净！
2. 可任意方向安装，建议水平安装。

1. After the first use or long-term shutdown, please exhaust the air in the system first!
2. It can be installed in any direction, and it is recommended to install horizontally.

样本数据来源于试验室环境，仅供参考，贵公司如需最新数据或有特殊需求，欢迎联系搏业液压工程师。
The sample data comes from the laboratory environment and is only for reference. If your company needs the latest data or has special needs, please contact Boye hydraulic engineer.

BYG10-16-04

比例阀用电磁铁
Electromagnet for proportional valve

DC12V 20W
DC24V 20W

其它规格可定做
Other can be customized

- 适用于 SP10-57D 系列双向电液比例螺纹插装阀
- 螺纹连接，线圈可实现免停机更换
- 线圈内孔 ϕ16，全塑封工艺

- Suitable for sp10-57d series Bidirectional electro-hydraulic proportional threaded cartridge valve
- Threaded connection, coil can be replaced without stopping
- Coil inner hole ϕ16. All-plastic sealing process

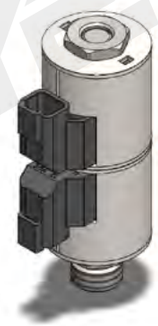

外形及连接尺寸
Outline and connection dimensions

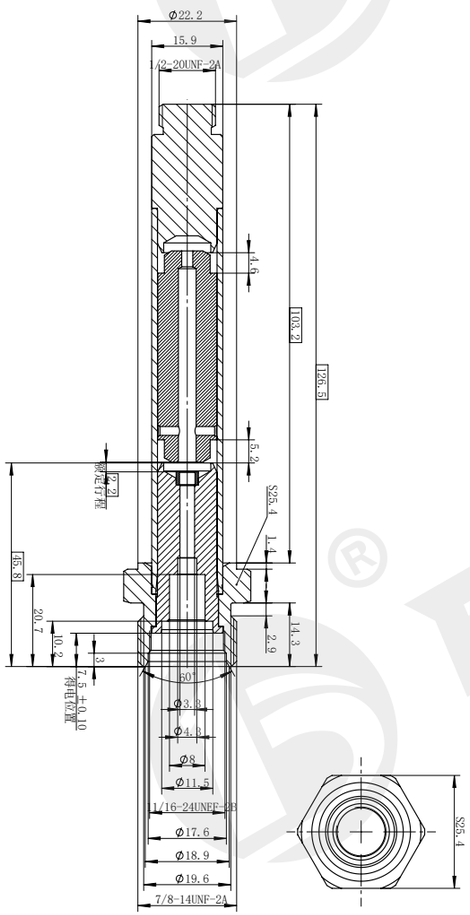

技术参数 /technical parameter			
环境温度 Ambient temperature	°C	-25~50	
额定电压 Rated voltage	VDC	12	24
额定功率 Rated power	W	20	
额定电阻 Rated resistance	Ω	7.10	28.30
额定行程 Rated stroke	mm	2.2	
额定推力 Rated thrust	N	20	
力滞环 Force hysteresis	%	≤ 4	
电流滞环 Current hysteresis	%	≤ 4	
重复精度 Repetition accuracy	%	≤ 1	
工作油压 Working oil pressure	MPa	≤ 25	
防护等级 Degree of protection		IP67	
通电持续率 Power on duration	%	100	
绝缘等级 Insulation class		H（180）	
电气连接方式 Electrical connection mode		DT04-2P	

样本数据来源于试验室环境，仅供参考，贵公司如需最新数据或有特殊需求，欢迎联系搏业液压工程师。
The sample data comes from the laboratory environment and is only for reference. If your company needs the latest data or has special needs, please contact Boye hydraulic engineer.

BYG11-16-01D

比例阀用电磁铁
Electromagnet for proportional valve

DC12V 20W
DC24V 20W

其它规格可定做
Other can be customized

- 适用于 HPV12-21 系列电液比例螺纹插装阀
- 螺纹连接，线圈可实现免停机更换
- 线圈内孔 ϕ16，全塑封工艺

- Suitable for hpv12-21 series electro-hydraulic proportional screw-in cartridge valves
- Threaded connection, coil can be replaced without stopping
- Coil inner hole ϕ16, full plastic sealing process

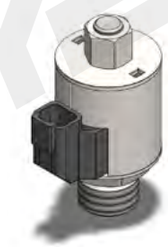

外形及连接尺寸
Outline and connection dimensions

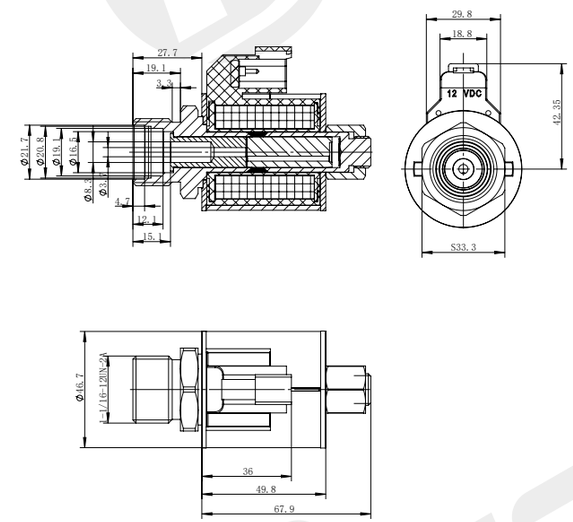

技术参数 /technical parameter			
环境温度 Ambient temperature	°C	-25~50	
额定电压 Rated voltage	VDC	12	24
额定功率 Rated power	W	20	
额定电阻 Rated resistance	Ω	7.10	28.30
额定行程 Rated stroke	mm	1.9	
全行程 Full stroke	mm	2.8	
额定推力 Rated thrust	N	70	
力滞环 Force hysteresis	%	≤ 4	
电流滞环 Current hysteresis	%	≤ 4	
重复精度 Repetition accuracy	%	≤ 1	
工作油压 Working oil pressure	MPa	≤ 21	
防护等级 Degree of protection		IP67	
通电持续率 Power on duration	%	100	
绝缘等级 Insulation class		H（180）	
电气连接方式 Electrical connection mode		DT04-2P	

力 - 位移特性曲线
F-S characteristic curve

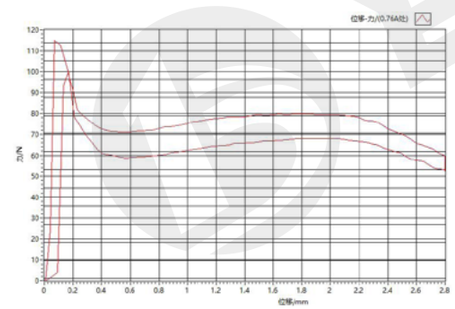

注意事项
matters needing attention

1. 首次使用或长期停机后启用，请先将系统内空气排净！
2. 可任意方向安装，建议水平安装。

1. After the first use or long-term shutdown, please exhaust the air in the system first!
2. It can be installed in any direction, and it is recommended to install horizontally.

样本数据来源于试验室环境，仅供参考，贵公司如需最新数据或有特殊需求，欢迎联系搏业液压工程师。
The sample data comes from the laboratory environment and is only for reference. If your company needs the latest data or has special needs, please contact Boye hydraulic engineer.

TEL:0574-86587131
www.nbboye.net

BYG12-16-01MD

比例阀用电磁铁
Electromagnet for proportional valve

DC12V 20W
DC24V 20W

其它规格可定做
Other can be customized

- 适用于 TS10-27A 系列电液比例螺纹插装阀
- 螺纹连接，线圈可实现免停机更换
- 配备手动调整装置
- 防尘防水设计
- 线圈内孔 ϕ16，全塑封工艺

- Suitable for TS10-27A Series electro-hydraulic proportional threaded cartridge valves
- Threaded connection, coil can be replaced without stopping
- Equipped with manual adjustment device
- Dust and waterproof design
- Coil inner hole ϕ 16. All-plastic sealing process

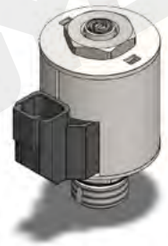

外形及连接尺寸
Outline and connection dimensions

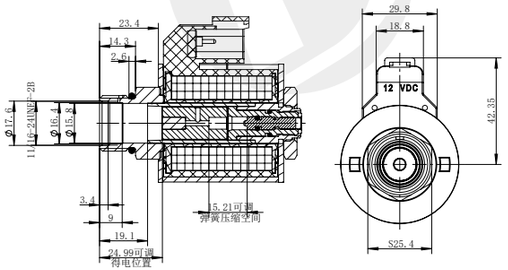

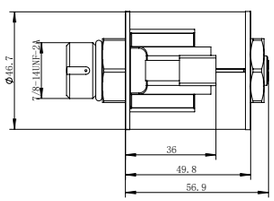

技术参数 /technical parameter			
环境温度 Ambient temperature	°C	-25~50	
额定电压 Rated voltage	VDC	12	24
额定功率 Rated power	W	20	
额定电阻 Rated resistance	Ω	7.10	28.30
力滞环 Force hysteresis	%	≤ 4	
电流滞环 Current hysteresis	%	≤ 4	
重复精度 Repetition accuracy	%	≤ 1	
工作油压 Working oil pressure	MPa	≤ 21	
防护等级 Degree of protection		IP67	
通电持续率 Power on duration	%	100	
绝缘等级 Insulation class		H（180）	
电气连接方式 Electrical connection mode		DT04-2P	

力 - 位移特性曲线
F-S characteristic curve

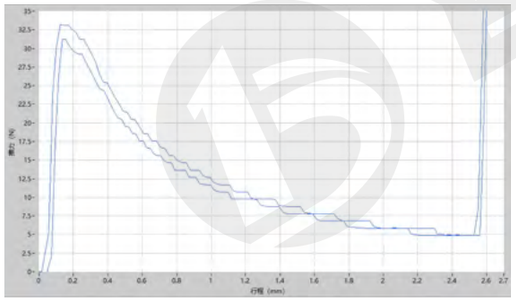

注意事项
matters needing attention

1. 首次使用或长期停机后启用，请先将系统内空气排净！
2. 可任意方向安装，建议水平安装。

1. After the first use or long-term shutdown, please exhaust the air in the system first!
2. It can be installed in any direction, and it is recommended to install horizontally.

样本数据来源于试验室环境，仅供参考，贵公司如需最新数据或有特殊需求，欢迎联系搏业液压工程师。
The sample data comes from the laboratory environment and is only for reference. If your company needs the latest data or has special needs, please contact Boye hydraulic engineer.

BYG12-16-02D

比例阀用电磁铁
Electromagnet for proportional valve

DC12V 20W
DC24V 20W

其它规格可定做
Other can be customized

- 适用于 TS38-20B 系列电液比例螺纹插装阀
- 螺纹连接，线圈可实现免停机更换
- 线圈内孔 ϕ16，全塑封工艺

- Suitable for ts38-20b series electro-hydraulic proportional screw-in cartridge valves
- Threaded connection, coil can be replaced without stopping
- Coil inner hole ϕ16, full plastic sealing process

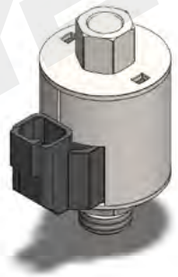

外形及连接尺寸
Outline and connection dimensions

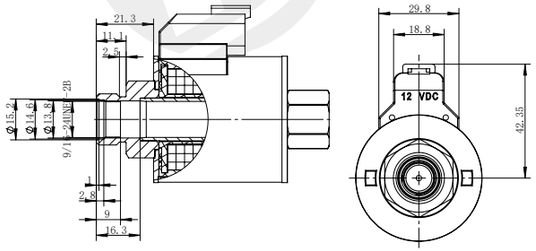

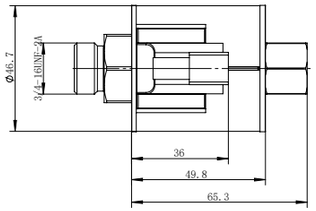

技术参数 /technical parameter			
环境温度 Ambient temperature	°C	-25~50	
额定电压 Rated voltage	VDC	12	24
额定功率 Rated power	W	20	
额定电阻 Rated resistance	Ω	7.10	28.30
力滞环 Force hysteresis	%	≤ 4	
电流滞环 Current hysteresis	%	≤ 4	
重复精度 Repetition accuracy	%	≤ 1	
工作油压 Working oil pressure	MPa	≤ 21	
防护等级 Degree of protection		IP67	
通电持续率 Power on duration	%	100	
绝缘等级 Insulation class		H（180）	
电气连接方式 Electrical connection mode		DT04-2P	

力 - 位移特性曲线
F-S characteristic curve

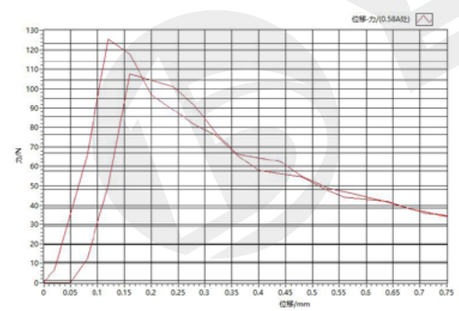

注意事项
matters needing attention

1. 首次使用或长期停机后启用，请先将系统内空气排净！
2. 可任意方向安装，建议水平安装。

1. After the first use or long-term shutdown, please exhaust the air in the system first!
2. It can be installed in any direction, and it is recommended to install horizontally.

样本数据来源于试验室环境，仅供参考，贵公司如需最新数据或有特殊需求，欢迎联系搏业液压工程师。
The sample data comes from the laboratory environment and is only for reference. If your company needs the latest data or has special needs, please contact Boye hydraulic engineer.

BYG12-16-03D

比例阀用电磁铁
Electromagnet for proportional valve

DC12V 20W
DC24V 20W

其它规格可定做
Other can be customized

- 适用于 TS10-26A 系列电液比例螺纹插装阀
- 螺纹连接，线圈可实现免停机更换
- 防尘防水设计
- 线圈内孔 ϕ16，全塑封工艺

- Suitable for ts10-26a series electro-hydraulic proportional screw-in cartridge valves
- Threaded connection, coil can be replaced without stopping
- Dust and waterproof design
- Coil inner hole ϕ16. All-plastic sealing process

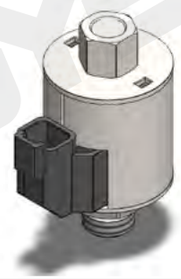

外形及连接尺寸
Outline and connection dimensions

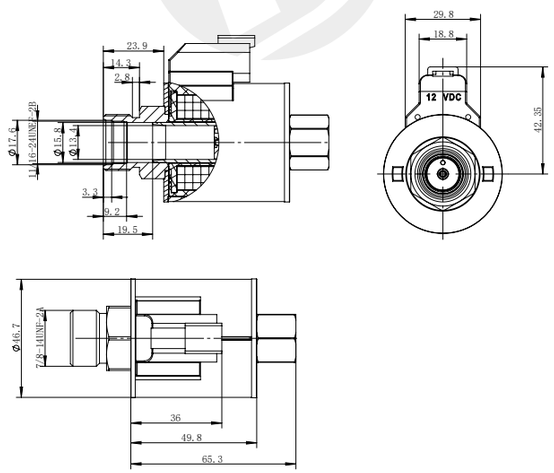

技术参数 /technical parameter			
环境温度 Ambient temperature	℃	-25~50	
额定电压 Rated voltage	VDC	12	24
额定功率 Rated power	W	20	
额定电阻 Rated resistance	Ω	7.10	28.30
额定推力 Rated thrust	N	25	
力滞环 Force hysteresis	%	≤ 4	
电流滞环 Current hysteresis	%	≤ 4	
重复精度 Repetition accuracy	%	≤ 1	
工作油压 Working oil pressure	MPa	≤ 21	
防护等级 Degree of protection		IP67	
通电持续率 Power on duration	%	100	
绝缘等级 Insulation class		H（180）	
电气连接方式 Electrical connection mode		DT04-2P	

力 - 电流特性曲线
F-C characteristic curve

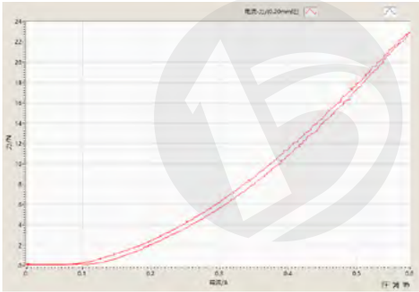

注意事项
matters needing attention

1. 首次使用或长期停机后启用，请先将系统内空气排净！
2. 可任意方向安装，建议水平安装。

1. After the first use or long-term shutdown, please exhaust the air in the system first!
2. It can be installed in any direction, and it is recommended to install horizontally.

样本数据来源于试验室环境，仅供参考，贵公司如需最新数据或有特殊需求，欢迎联系搏业液压工程师。
The sample data comes from the laboratory environment and is only for reference. If your company needs the latest data or has special needs, please contact Boye hydraulic engineer.

BYG12-16-04MD

比例阀用电磁铁
Electromagnet for proportional valve

DC12V 20W
DC24V 20W

其它规格可定做
Other can be customized

- 适用于 TS38-21D 系列电液比例螺纹插装阀
- 螺纹连接，线圈可实现免停机更换
- 配备手动调整装置
- 线圈内孔 ϕ16，全塑封工艺

- Suitable for ts38-21d series electro-hydraulic proportional screw-in cartridge valves
- Threaded connection, coil can be replaced without stopping
- Equipped with manual adjustment device
- Coil inner hole ϕ16, full plastic sealing process

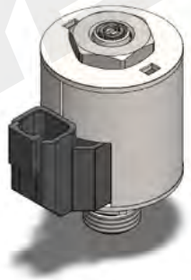

外形及连接尺寸
Outline and connection dimensions

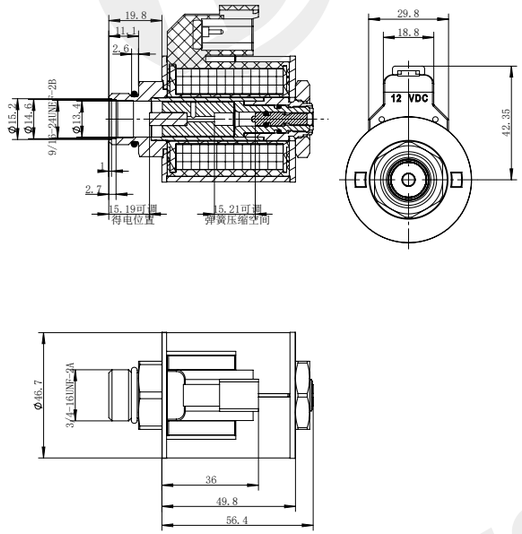

技术参数 /technical parameter			
环境温度 Ambient temperature	℃	-25~50	
额定电压 Rated voltage	VDC	12	24
额定功率 Rated power	W	20	
额定电阻 Rated resistance	Ω	7.10	28.30
额定推力 Rated thrust	N	25	
力滞环 Force hysteresis	%	≤ 4	
电流滞环 Current hysteresis	%	≤ 4	
重复精度 Repetition accuracy	%	≤ 1	
工作油压 Working oil pressure	MPa	≤ 21	
防护等级 Degree of protection		IP67	
通电持续率 Power on duration	%	100	
绝缘等级 Insulation class		H（180）	
电气连接方式 Electrical connection mode		DT04-2P	

力 - 位移特性曲线
F-S characteristic curve

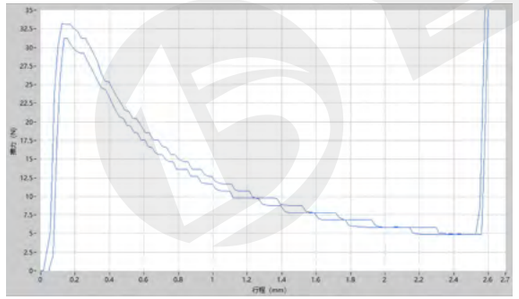

注意事项
matters needing attention

1. 首次使用或长期停机后启用，请先将系统内空气排净！
2. 可任意方向安装，建议水平安装。

1. After the first use or long-term shutdown, please exhaust the air in the system first!
2. It can be installed in any direction, and it is recommended to install horizontally.

样本数据来源于试验室环境，仅供参考，贵公司如需最新数据或有特殊需求，欢迎联系搏业液压工程师。
The sample data comes from the laboratory environment and is only for reference. If your company needs the latest data or has special needs, please contact Boye hydraulic engineer.

BYG14-18-01MD

比例阀用电磁铁
Electromagnet for proportional valve

DC12V 2.1A
DC24V 1.05A

其它规格可定做
Other can be customized

- 适用于 PDR08-01 系列电液比例螺纹插装阀
- 螺纹连接，线圈可实现免停机更换
- 配备手动调整装置
- 线圈内孔 ϕ18，全塑封工艺

- Suitable for PDR08-01 Series electro-hydraulic proportional threaded cartridge valves
- Threaded connection, coil can be replaced without stopping
- Equipped with manual adjustment device
- Coil inner hole ϕ 18. All-plastic sealing process

外形及连接尺寸
Outline and connection dimensions

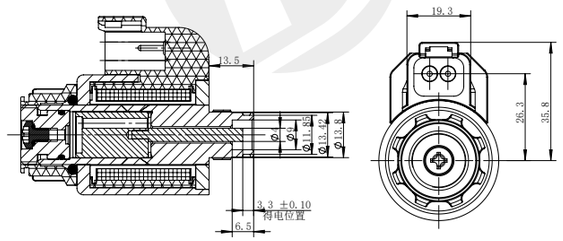

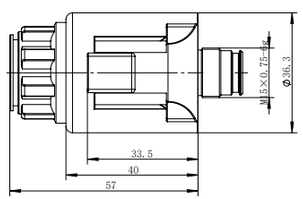

技术参数 /technical parameter			
环境温度 Ambient temperature	°C	-25~50	
额定电压 Rated voltage	VDC	12	24
额定电流 Rated current	A	2.1	1.05
最大电流 Maximum current	A	5.45	2.73
额定电阻 Rated resistance	Ω	2.20	8.80
额定行程 Rated stroke	mm	1.8	
全行程 Full stroke	mm	1.8	
额定推力 Rated thrust	N	34	
力滞环 Force hysteresis	%	≤ 4	
电流滞环 Current hysteresis	%	≤ 4	
重复精度 Repetition accuracy	%	≤ 1	
工作油压 Working oil pressure	MPa	≤ 21	
防护等级 Degree of protection		IP67	
通电持续率 Power on duration	%	100	
绝缘等级 Insulation class		H（180）	
电气连接方式 Electrical connection mode		DT04-2P	

力 - 位移特性曲线
F-S characteristic curve

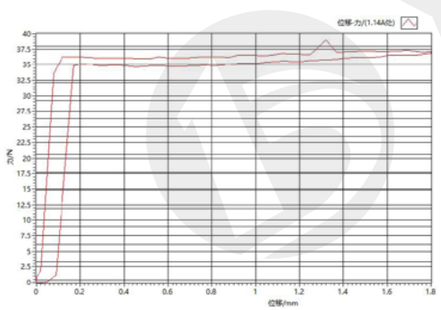

注意事项
matters needing attention

1. 首次使用或长期停机后启用，请先将系统内空气排净！
2. 可任意方向安装，建议水平安装。

1. After the first use or long-term shutdown, please exhaust the air in the system first!
2. It can be installed in any direction, and it is recommended to install horizontally.

样本数据来源于试验室环境，仅供参考，贵公司如需最新数据或有特殊需求，欢迎联系搏业液压工程师。
The sample data comes from the laboratory environment and is only for reference. If your company needs the latest data or has special needs, please contact Boye hydraulic engineer.

BYG15-37-01MD

比例阀用电磁铁
Electromagnet for proportional valve

DC12V 1.2A
DC24V 0.6A

其它规格可定做
Other can be customized

- 适用于 FCV85 系列电液比例叉车上升阀
- 螺纹连接，线圈可实现免停机更换
- 配备手动调整装置
- 线圈内孔 ϕ19，全塑封工艺

- Suitable for FCV85 Series electro-hydraulic proportional lift valve for forklift
- Threaded connection, coil can be replaced without stopping
- Equipped with manual adjustment device
- Coil inner hole ϕ19, full plastic sealing process

外形及连接尺寸
Outline and connection dimensions

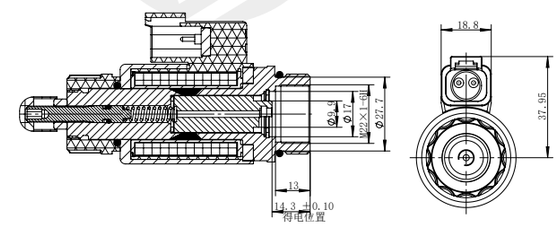

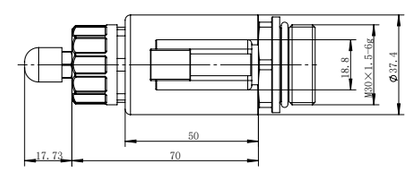

技术参数 /technical parameter			
环境温度 Ambient temperature	°C	-25~50	
额定电压 Rated voltage	VDC	12	24
额定电流 Rated current	A	1.2	0.6
最大电流 Maximum current	A	1.6	0.85
额定电阻 Rated resistance	Ω	4.80	18
额定行程 Rated stroke	mm	3	
全行程 Full stroke	mm	5	
额定推力 Rated thrust	N	32	
力滞环 Force hysteresis	%	≤ 4	
电流滞环 Current hysteresis	%	≤ 4	
重复精度 Repetition accuracy	%	≤ 1	
工作油压 Working oil pressure	MPa	≤ 35	
防护等级 Degree of protection		IP67	
通电持续率 Power on duration	%	100	
绝缘等级 Insulation class		H（180）	
电气连接方式 Electrical connection mode		DT04-2P	

力 - 位移特性曲线
F-S characteristic curve

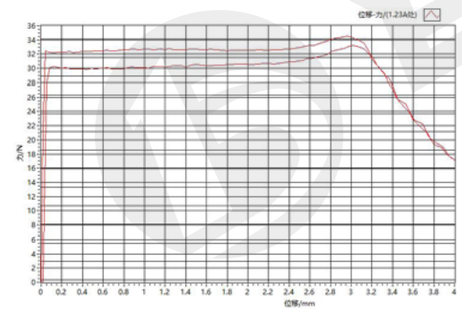

注意事项
matters needing attention

1. 首次使用或长期停机后启用，请先将系统内空气排净！
2. 可任意方向安装，建议水平安装。

1. After the first use or long-term shutdown, please exhaust the air in the system first!
2. It can be installed in any direction, and it is recommended to install horizontally.

样本数据来源于试验室环境，仅供参考，贵公司如需最新数据或有特殊需求，欢迎联系搏业液压工程师。
The sample data comes from the laboratory environment and is only for reference. If your company needs the latest data or has special needs, please contact Boye hydraulic engineer.

BYG15-37-02MD

比例阀用电磁铁
Electromagnet for proportional valve

DC12V 1.2A
DC24V 0.6A

其它规格可定做
Other can be customized

- 适用于 FCV85 系列电液比例叉车下降阀
- 螺纹连接，线圈可实现免停机更换
- 配备手动调整装置
- 线圈内孔 ϕ19，全塑封工艺

- Suitable for FCV85 Series electro-hydraulic proportional forklift lowering valve
- Threaded connection, coil can be replaced without stopping
- Equipped with manual adjustment device
- Coil inner hole ϕ19, full plastic sealing process

外形及连接尺寸
Outline and connection dimensions

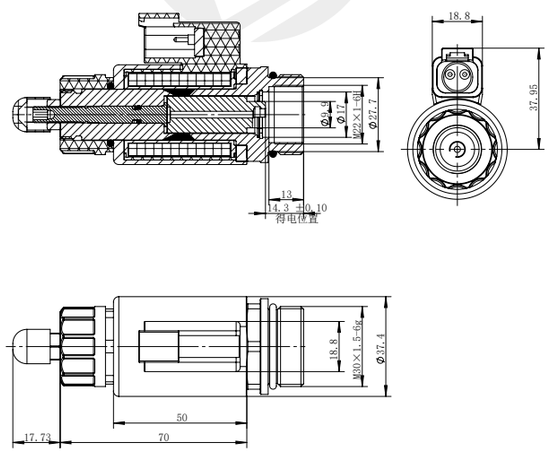

技术参数 /technical parameter			
环境温度 Ambient temperature	°C	-25~50	
额定电压 Rated voltage	VDC	12	24
额定电流 Rated current	A	1.2	0.60
最大电流 Maximum current	A	1.6	0.85
额定电阻 Rated resistance	Ω	4.80	18
额定行程 Rated stroke	mm	3	
全行程 Full stroke	mm	5	
额定推力 Rated thrust	N	32	
力滞环 Force hysteresis	%	≤ 4	
电流滞环 Current hysteresis	%	≤ 4	
重复精度 Repetition accuracy	%	≤ 1	
工作油压 Working oil pressure	MPa	≤ 35	
防护等级 Degree of protection		IP67	
通电持续率 Power on duration	%	100	
绝缘等级 Insulation class		H（180）	
电气连接方式 Electrical connection mode		DT04-2P	

力 - 位移特性曲线
F-S characteristic curve

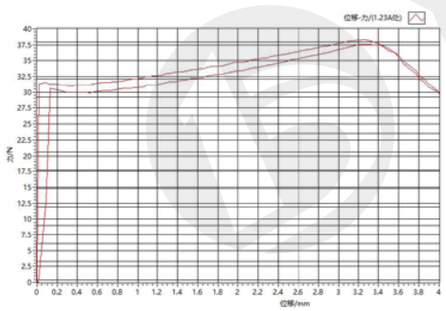

注意事项
matters needing attention

1. 首次使用或长期停机后启用，请先将系统内空气排净！
2. 可任意方向安装，建议水平安装。

1. After the first use or long-term shutdown, please exhaust the air in the system first!
2. It can be installed in any direction, and it is recommended to install horizontally.

样本数据来源于试验室环境，仅供参考，贵公司如需最新数据或有特殊需求，欢迎联系搏业液压工程师。
The sample data comes from the laboratory environment and is only for reference. If your company needs the latest data or has special needs, please contact Boye hydraulic engineer.

BYM 插装阀用电磁铁

SOLENOID FOR THREADED CARTRIDGE VALVE

- 搏业液压，BYM 插装阀用电磁铁，作为液压电磁阀关键电磁驱动元件，广泛应用于工业、工程、农业、医疗、机械等领域自动化控制系统中。
- 技术标准严格按照 JBT5244/VDE0580 设计生产。
- 采用优质导磁材料退火处理和低摩擦系数导向轴承，保证磁滞小，重复精度高，响应快。
- 提供多种标准连接方式，外壳防护等级 IP65-IP69K，可满足不同领域环境需要。
- 采用高质量 H 级漆包线和绝缘材料，全塑封线圈结构，坚固耐用，散热快，即使长期使用也不会烧损。
- 导磁套工作压力≤ 21MPa，极限压力≥ 31.5MPa，爆破压力≥ 63MPa。
- 机械寿命＞ 200 万次，脉冲疲劳寿命＞ 200 万次。
- 标准产品若不能满足您的需求时，可联系我公司，若有其他特殊要求可定制，欢迎咨询。

- Boye Hydraulic, BYM cartridge valve electromagnet, as the key electromagnetic drive component of hydraulic solenoid valve, is widely used in automation control systems in industry, engineering, agriculture, medical, machinery and other fields.
- The technical standard is designed and produced in strict accordance with JBT5244 / VDE0580.
- High quality magnetic conducting material annealing treatment and low friction coefficient guide bearing are adopted to ensure small hysteresis and high repetition accuracy.
- A variety of standard connection modes are provided, and the enclosure protection grade is IP65-1P69K, which can meet the environmental needs of different fields.
- It adopts high-quality H-class enamelled wire and insulating material, and fully plastic sealed coil structure, which is firm and durable, fast heat dissipation, and will not burn even if it is used for a long time.
- Working pressure of magnetic guide sleeve ≤ 21MPa, limit pressure ≥ 31.5Mpa, burst pressure ≥ 63Mpa
- Mechanical life > 2 million times, pulse fatigue life > 2 million times
- If the standard products can not meet your needs, you can contact our company. If there are other special requirements, you can customize them. Welcome to consult.

BYM01-18-01G

螺纹插装阀用电磁铁

Solenoid for threaded cartridge valve

DC 24V
AC 220V

其它规格可定做
Other can be customized

- 适用于 WSM06020ZR 系列电液螺纹插装换向阀
- 螺纹连接，线圈可实现免停机更换
- 线圈内孔 ϕ18，全塑封工艺

- Applicable to WSM06020ZR series electro-hydraulic threaded cartridge valve
- Threaded connection, coil can be replaced without stopping
- Coil inner hole ϕ 18. All-plastic sealing process

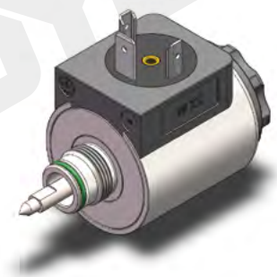

外形及连接尺寸

Outline and connection dimensions

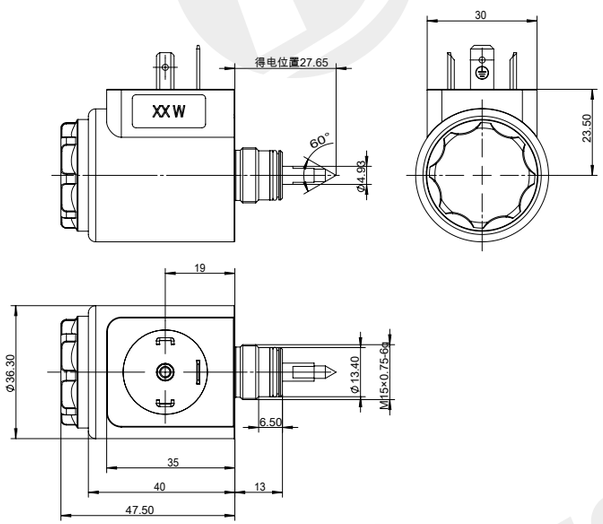

技术参数 /technical parameter		
环境温度 Ambient temperature	℃	-25~50
电压波动范围 Voltage fluctuation range	%	85~110
额定功率 Rated power	W	16
额定行程 Rated stroke	mm	1.5
全行程 Full stroke	mm	⩾ 3
工作油压 Working oil pressure	Mpa	⩽ 21
防护等级 Degree of protection		IP65
操作频率 Operating frequency	T/h	12000
通电持续率 Power on duration	%	100
绝缘等级 Insulation class		H(180)
电气连接方式 Electrical connection mode		DIN43650

力 - 位移特性曲线

F-S characteristic curve

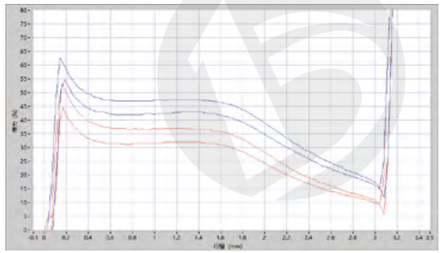

注意事项

matters needing attention

1. 线圈不得单独通电使用，有烧损风险！
2. 非防爆线圈，不得使用在有爆炸危险的介质中！
3. 线圈安装后，必须接地可靠，否则有触电危险！

1. The coil shall not be powered on alone, which has the risk of burning!
2. Non explosion-proof coil shall not be used in medium with explosion risk!
3. After the coil is installed, it must be grounded reliably, otherwise there is a risk of electric shock！

样本数据来源于试验室环境，仅供参考，贵公司如需最新数据或有特殊需求，欢迎联系搏业液压工程师。
The sample data comes from the laboratory environment and is only for reference. If your company needs the latest data or has special needs, please contact Boye hydraulic engineer.

BYM01-18-01D

螺纹插装阀用电磁铁

Solenoid for threaded cartridge valve

DC 12V
DC 24V

其它规格可定做
Other can be customized

- 适用于 WSM06020ZR 系列电液螺纹插装换向阀
- 螺纹连接，线圈可实现免停机更换
- 线圈内孔 ϕ18，全塑封工艺

- Applicable to WSM06020ZR series electro-hydraulic threaded cartridge valve
- Threaded connection, coil can be replaced without stopping
- Coil inner hole ϕ 18. All-plastic sealing process

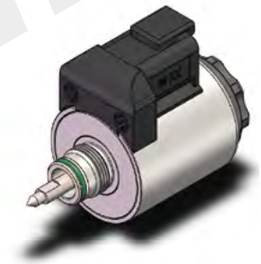

外形及连接尺寸

Outline and connection dimensions

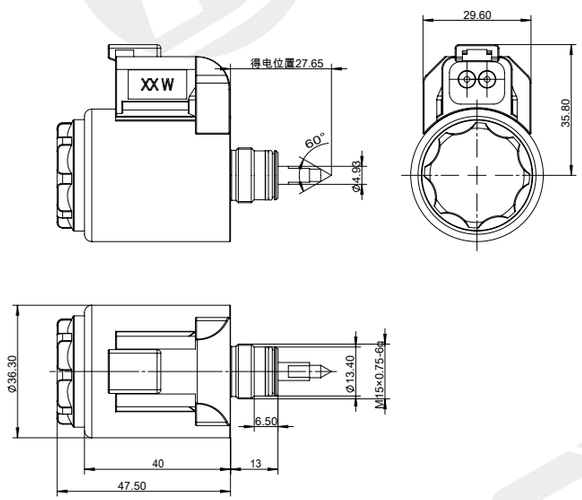

技术参数 /technical parameter		
环境温度 Ambient temperature	℃	-25~50
电压波动范围 Voltage fluctuation range	%	85~110
额定功率 Rated power	W	16
额定行程 Rated stroke	mm	1.5
全行程 Full stroke	mm	⩾ 3
工作油压 Working oil pressure	Mpa	⩽ 21
防护等级 Degree of protection		IP67
操作频率 Operating frequency	T/h	12000
通电持续率 Power on duration	%	100
绝缘等级 Insulation class		H(180)
电气连接方式 Electrical connection mode		DT04-2P

力 - 位移特性曲线

F-S characteristic curve

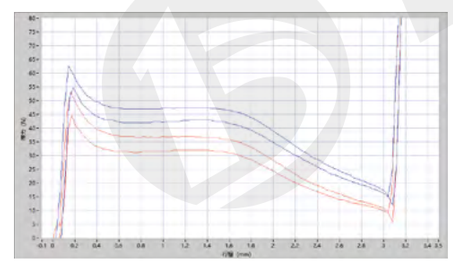

注意事项

matters needing attention

1. 线圈不得单独通电使用，有烧损风险！
2. 非防爆线圈，不得使用在有爆炸危险的介质中！
3. 线圈安装后，必须接地可靠，否则有触电危险！

1. The coil shall not be powered on alone, which has the risk of burning!
2. Non explosion-proof coil shall not be used in medium with explosion risk!
3. After the coil is installed, it must be grounded reliably, otherwise there is a risk of electric shock！

样本数据来源于试验室环境，仅供参考，贵公司如需最新数据或有特殊需求，欢迎联系搏业液压工程师。
The sample data comes from the laboratory environment and is only for reference. If your company needs the latest data or has special needs, please contact Boye hydraulic engineer.

BYM01-18-01MG

螺纹插装阀用电磁铁

Solenoid for threaded cartridge valve

DC 24V
AC 220V

其它规格可定做
Other can be customized

- 适用于 WSM06020ZR 系列电液螺纹插装换向阀
- 螺纹连接，线圈可实现免停机更换
- 配备手动调整装置
- 防尘防水设计
- 线圈内孔 ϕ18，全塑封工艺

- Applicable to WSM06020ZR series electro-hydraulic threaded cartridge valve
- Threaded connection, coil can be replaced without stopping
- Equipped with manual adjustment device
- Dustproof and waterproof design
- Coil inner hole ϕ 18. All-plastic sealing process

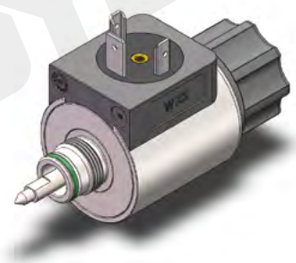

外形及连接尺寸

Outline and connection dimensions

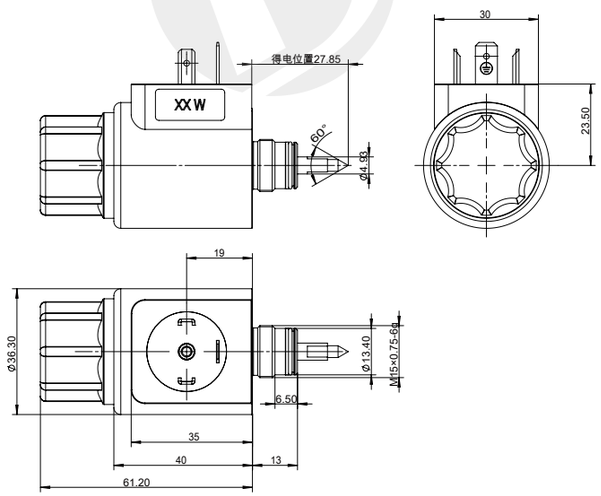

技术参数 /technical parameter		
环境温度 Ambient temperature	℃	-25~50
电压波动范围 Voltage fluctuation range	%	85~110
额定功率 Rated power	W	16
额定行程 Rated stroke	mm	1.5
全行程 Full stroke	mm	⩾ 3
工作油压 Working oil pressure	Mpa	⩽ 21
防护等级 Degree of protection		IP65
操作频率 Operating frequency	T/h	12000
通电持续率 Power on duration	%	100
绝缘等级 Insulation class		H(180)
电气连接方式 Electrical connection mode		DIN43650

力 - 位移特性曲线

F-S characteristic curve

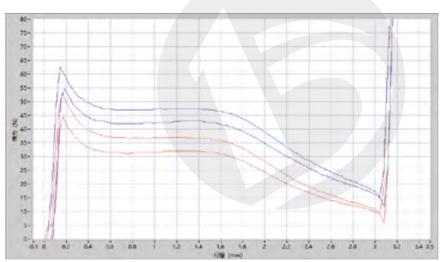

注意事项

matters needing attention

1. 线圈不得单独通电使用，有烧损风险！
2. 非防爆线圈，不得使用在有爆炸危险的介质中！
3. 线圈安装后，必须接地可靠，否则有触电危险！

1. The coil shall not be powered on alone, which has the risk of burning!
2. Non explosion-proof coil shall not be used in medium with explosion risk!
3. After the coil is installed, it must be grounded reliably, otherwise there is a risk of electric shock！

样本数据来源于试验室环境，仅供参考，贵公司如需最新数据或有特殊需求，欢迎联系搏业液压工程师。
The sample data comes from the laboratory environment and is only for reference. If your company needs the latest data or has special needs, please contact Boye hydraulic engineer.

BYM01-18-01MD

螺纹插装阀用电磁铁

Solenoid for threaded cartridge valve

DC 12V
DC 24V

其它规格可定做
Other can be customized

- 适用于 WSM06020ZR 系列电液螺纹插装换向阀
- 螺纹连接，线圈可实现免停机更换
- 配备手动调整装置
- 防尘防水设计
- 线圈内孔 ϕ18，全塑封工艺

- Applicable to WSM06020ZR series electro-hydraulic threaded cartridge valve
- Threaded connection, coil can be replaced without stopping
- Equipped with manual adjustment device
- Dustproof and waterproof design
- Coil inner hole ϕ 18. All-plastic sealing process

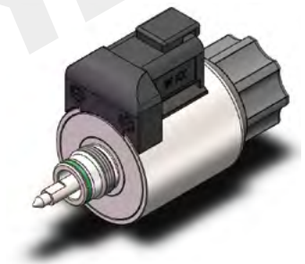

外形及连接尺寸

Outline and connection dimensions

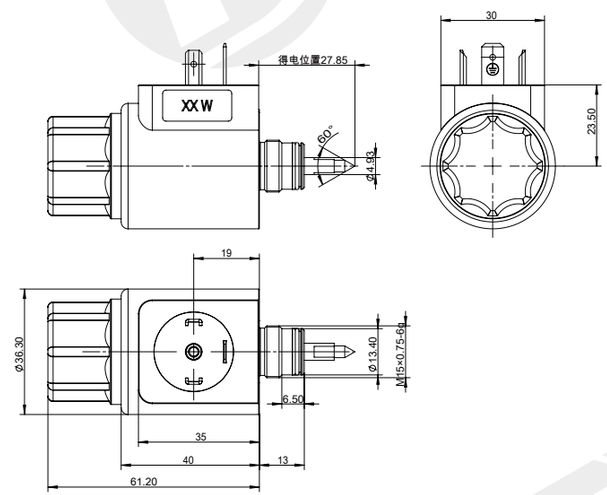

技术参数 /technical parameter		
环境温度 Ambient temperature	℃	-25~50
电压波动范围 Voltage fluctuation range	%	85~110
额定功率 Rated power	W	16
额定行程 Rated stroke	mm	1.5
全行程 Full stroke	mm	⩾ 3
工作油压 Working oil pressure	Mpa	⩽ 21
防护等级 Degree of protection		IP67
操作频率 Operating frequency	T/h	12000
通电持续率 Power on duration	%	100
绝缘等级 Insulation class		H(180)
电气连接方式 Electrical connection mode		DT04-2P

力 - 位移特性曲线

F-S characteristic curve

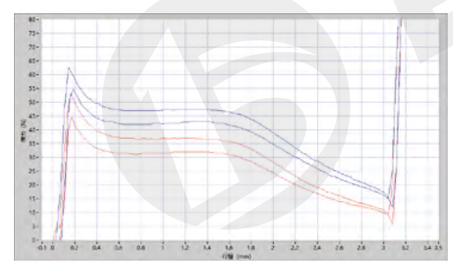

注意事项

matters needing attention

1. 线圈不得单独通电使用，有烧损风险！
2. 非防爆线圈，不得使用在有爆炸危险的介质中！
3. 线圈安装后，必须接地可靠，否则有触电危险！

1. The coil shall not be powered on alone, which has the risk of burning!
2. Non explosion-proof coil shall not be used in medium with explosion risk!
3. After the coil is installed, it must be grounded reliably, otherwise there is a risk of electric shock！

样本数据来源于试验室环境，仅供参考，贵公司如需最新数据或有特殊需求，欢迎联系搏业液压工程师。
The sample data comes from the laboratory environment and is only for reference. If your company needs the latest data or has special needs, please contact Boye hydraulic engineer.

BYM01-18-03W-03

螺纹插装阀用电磁铁
Solenoid for threaded cartridge valve

DC 12V
DC 24V

其它规格可定做
Other can be customized

- 适用于 4 通径带位置反馈螺纹插装换向阀
- 螺纹连接，线圈可实现免停机更换
- 配备手动调整装置
- 线圈内孔 ϕ18，全塑封工艺
- Applicable to 4-way threaded cartridge valve with position feedback
- Threaded connection, coil can be replaced without stopping
- Equipped with manual adjustment device
- Coil inner hole ϕ 18. All-plastic sealing process

外形及连接尺寸
Outline and connection dimensions

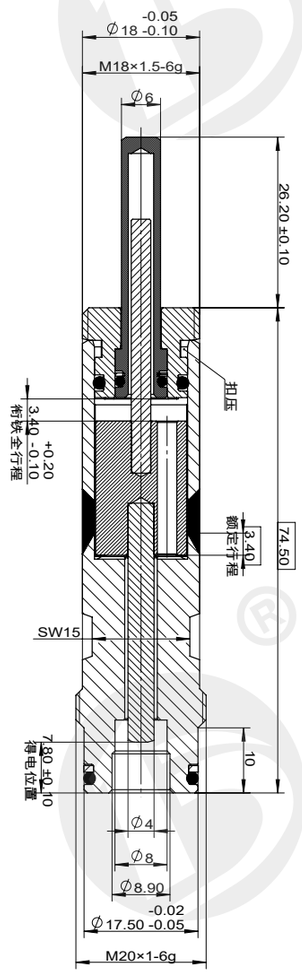

技术参数 /technical parameter		
环境温度 Ambient temperature	℃	-25~50
电压波动范围 Voltage fluctuation range	%	85~110
额定功率 Rated power	W	20
额定行程 Rated stroke	mm	3.4
全行程 Full stroke	mm	3.4
工作油压 Working oil pressure	Mpa	≤ 21
防护等级 Degree of protection		IP65
操作频率 Operating frequency	T/h	12000
通电持续率 Power on duration	%	100
绝缘等级 Insulation class		H(180)
电气连接方式 Electrical connection mode		DIN43650/ DT04-2P

力 - 位移特性曲线
F-S characteristic curve

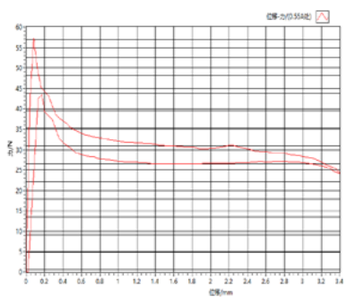

样本数据来源于试验室环境，仅供参考，贵公司如需最新数据或有特殊需求，欢迎联系搏业液压工程师。
The sample data comes from the laboratory environment and is only for reference. If your company needs the latest data or has special needs, please contact Boye hydraulic engineer.

BYM08-13-01G

螺纹插装阀用电磁铁
Solenoid for threaded cartridge valve

DC 12V
DC 24V

其它规格可定做
Other can be customized

- 适用于 EP-08 系列电液螺纹插装阀
- 螺纹连接，线圈可实现免停机更换
- 配备手动调整装置
- 线圈内孔 ϕ13，全塑封工艺
- Applicable to EP-08 series electro-hydraulic threaded cartridge valves
- Threaded connection, coil can be replaced without stopping
- Equipped with manual adjustment device
- Coil inner hole ϕ 13. All-plastic sealing process

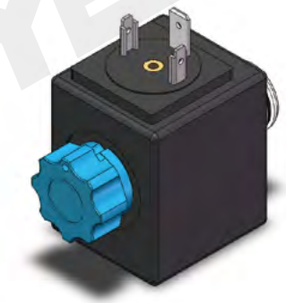

外形及连接尺寸
Outline and connection dimensions

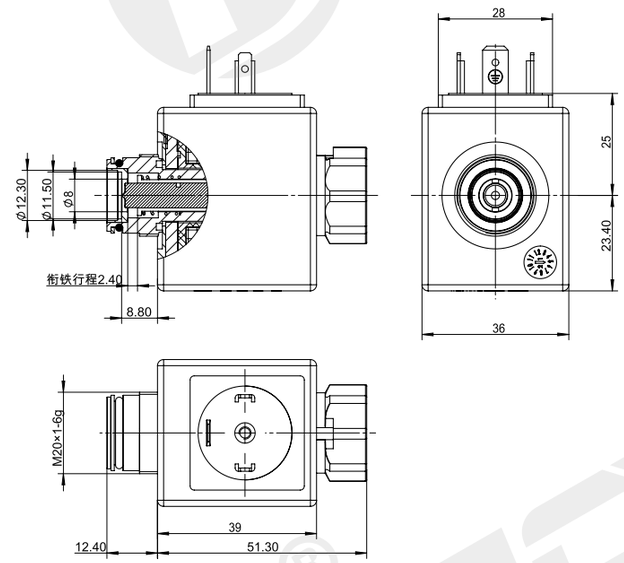

技术参数 /technical parameter		
环境温度 Ambient temperature	℃	-25~50
电压波动范围 Voltage fluctuation range	%	85~110
额定功率 Rated power	W	26
额定行程 Rated stroke	mm	1.5
全行程 Full stroke	mm	≥ 3
工作油压 Working oil pressure	Mpa	≤ 21
防护等级 Degree of protection		IP65
操作频率 Operating frequency	T/h	12000
通电持续率 Power on duration	%	100
绝缘等级 Insulation class		H(180)
电气连接方式 Electrical connection mode		DIN43650

注意事项
matters needing attention

1. 线圈不得单独通电使用，有烧损风险！
2. 非防爆线圈，不得使用在有爆炸危险的介质中！
3. 线圈安装后，必须接地可靠，否则有触电危险！

1. The coil shall not be powered on alone, which has the risk of burning!
2. Non explosion-proof coil shall not be used in medium with explosion risk!
3. After the coil is installed, it must be grounded reliably, otherwise there is a risk of electric shock！

样本数据来源于试验室环境，仅供参考，贵公司如需最新数据或有特殊需求，欢迎联系搏业液压工程师。
The sample data comes from the laboratory environment and is only for reference. If your company needs the latest data or has special needs, please contact Boye hydraulic engineer.

BYM
TEL:0574-86587131 www.nbboye.net

BYM10-40-01G

螺纹插装阀用电磁铁

Solenoid for threaded cartridge valve

DC 12V
DC 24V

其它规格可定做
Other can be customized

- 适用于 SVS-40 系列电液螺纹插装阀
- 螺纹连接，线圈可实现免停机更换
- 线圈内孔 ϕ19，全塑封工艺

- Applicable to SVS-40 Series of electro-hydraulic threaded cartridge valves
- Threaded connection, coil can be replaced without stopping
- Coil inner hole ϕ 19. All-plastic sealing process

外形及连接尺寸

Outline and connection dimensions

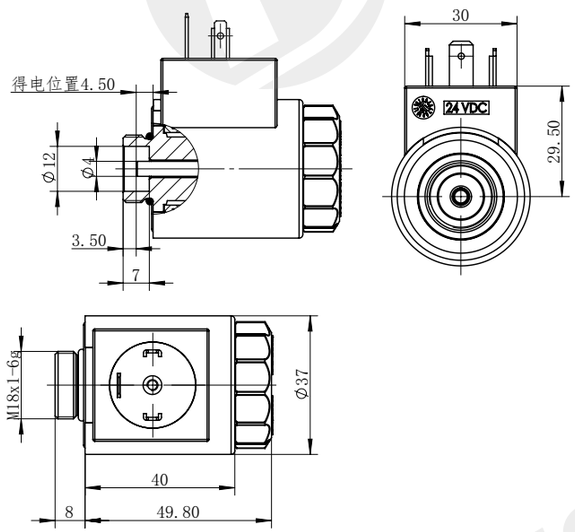

技术参数 /technical parameter		
环境温度 Ambient temperature	°C	-25~50
电压波动范围 Voltage fluctuation range	%	85~110
额定功率 Rated power	W	20
额定行程 Rated stroke	mm	2.5
全行程 Full stroke	mm	⩾ 3.6
工作油压 Working oil pressure	Mpa	⩽ 35
防护等级 Degree of protection		IP65
操作频率 Operating frequency	T/h	12000
通电持续率 Power on duration	%	100
绝缘等级 Insulation class		H(180)
电气连接方式 Electrical connection mode		DIN43650

力 - 位移特性曲线

F-S characteristic curve

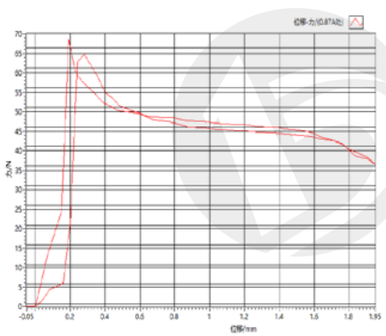

注意事项

matters needing attention

1. 线圈不得单独通电使用，有烧损风险！
2. 非防爆线圈，不得使用在有爆炸危险的介质中！
3. 线圈安装后，必须接地可靠，否则有触电危险！

1. The coil shall not be powered on alone, which has the risk of burning!
2. Non explosion-proof coil shall not be used in medium with explosion risk!
3. After the coil is installed, it must be grounded reliably, otherwise there is a risk of electric shock！

样本数据来源于试验室环境，仅供参考，贵公司如需最新数据或有特殊需求，欢迎联系搏业液压工程师。
The sample data comes from the laboratory environment and is only for reference. If your company needs the latest data or has special needs, please contact Boye hydraulic engineer.

BYM10-40-01D

螺纹插装阀用电磁铁

Solenoid for threaded cartridge valve

DC 12V
DC 24V

其它规格可定做
Other can be customized

- 适用于 SVS-40 系列电液螺纹插装阀
- 螺纹连接，线圈可实现免停机更换
- 线圈内孔 ϕ19，全塑封工艺

- Applicable to SVS-40 Series of electro-hydraulic threaded cartridge valves
- Threaded connection, coil can be replaced without stopping
- Coil inner hole ϕ 19. All-plastic sealing process

外形及连接尺寸

Outline and connection dimensions

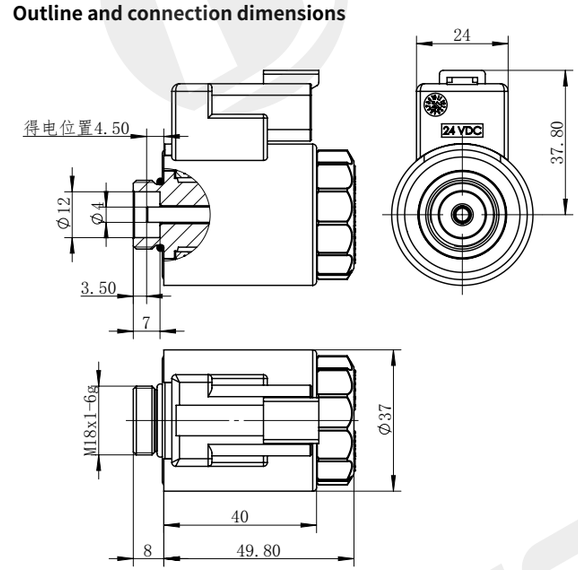

技术参数 /technical parameter		
环境温度 Ambient temperature	°C	-25~50
电压波动范围 Voltage fluctuation range	%	85~110
额定功率 Rated power	W	20
额定行程 Rated stroke	mm	2.5
全行程 Full stroke	mm	⩾ 3.6
工作油压 Working oil pressure	Mpa	⩽ 35
防护等级 Degree of protection		IP67
操作频率 Operating frequency	T/h	12000
通电持续率 Power on duration	%	100
绝缘等级 Insulation class		H(180)
电气连接方式 Electrical connection mode		DT04-2P

力 - 位移特性曲线

F-S characteristic curve

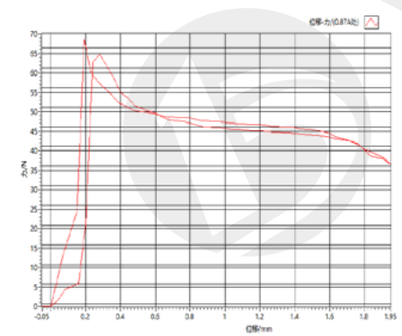

注意事项

matters needing attention

1. 线圈不得单独通电使用，有烧损风险！
2. 非防爆线圈，不得使用在有爆炸危险的介质中！
3. 线圈安装后，必须接地可靠，否则有触电危险！

1. The coil shall not be powered on alone, which has the risk of burning!
2. Non explosion-proof coil shall not be used in medium with explosion risk!
3. After the coil is installed, it must be grounded reliably, otherwise there is a risk of electric shock！

样本数据来源于试验室环境，仅供参考，贵公司如需最新数据或有特殊需求，欢迎联系搏业液压工程师。
The sample data comes from the laboratory environment and is only for reference. If your company needs the latest data or has special needs, please contact Boye hydraulic engineer.

BYM10-40M-01G

螺纹插装阀用电磁铁
Solenoid for threaded cartridge valve

DC 12V
DC 24V

其它规格可定做
Other can be customized

- 适用于 SVS-40 系列电液螺纹插装阀
- 螺纹连接，线圈可实现免停机更换
- 配备手动应急装置
- 线圈内孔 ϕ19，全塑封工艺

- Applicable to SVS-40 Series of electro-hydraulic threaded cartridge valves
- Threaded connection, coil can be replaced without stopping
- Equipped with manual emergency device
- Coil inner hole ϕ 19. All-plastic sealing process

外形及连接尺寸
Outline and connection dimensions

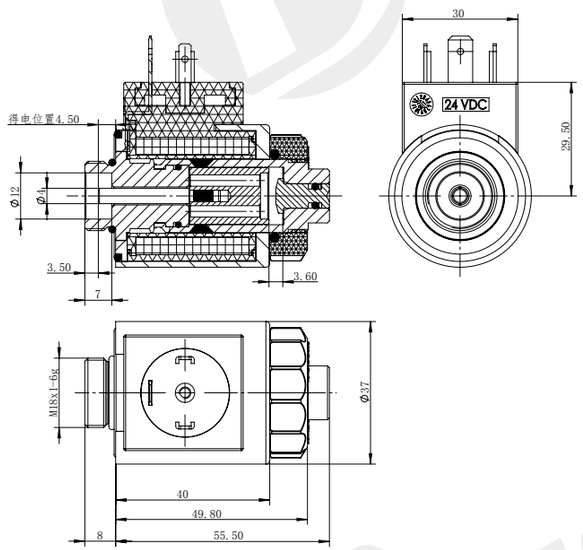

技术参数 /technical parameter		
环境温度 Ambient temperature	°C	-25~50
电压波动范围 Voltage fluctuation range	%	85~110
额定功率 Rated power	W	20
额定行程 Rated stroke	mm	2
全行程 Full stroke	mm	⩾ 3.6
工作油压 Working oil pressure	Mpa	⩽ 35
防护等级 Degree of protection		IP65
操作频率 Operating frequency	T/h	12000
通电持续率 Power on duration	%	100
绝缘等级 Insulation class		H(180)
电气连接方式 Electrical connection mode		DIN43650

力 - 位移特性曲线
F-S characteristic curve

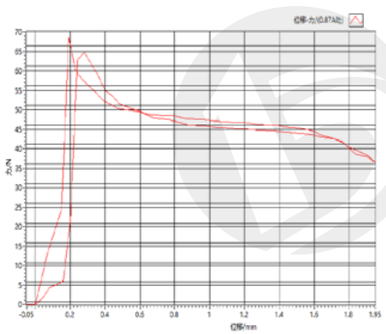

注意事项
matters needing attention

1. 线圈不得单独通电使用，有烧损风险！
2. 非防爆线圈，不得使用在有爆炸危险的介质中！
3. 线圈安装后，必须接地可靠，否则有触电危险！

1. The coil shall not be powered on alone, which has the risk of burning!
2. Non explosion-proof coil shall not be used in medium with explosion risk!
3. After the coil is installed, it must be grounded reliably, otherwise there is a risk of electric shock！

样本数据来源于试验室环境，仅供参考，贵公司如需最新数据或有特殊需求，欢迎联系搏业液压工程师。
The sample data comes from the laboratory environment and is only for reference. If your company needs the latest data or has special needs, please contact Boye hydraulic engineer.

BYM10-40M-01D

螺纹插装阀用电磁铁
Solenoid for threaded cartridge valve

DC 12V
DC 24V

其它规格可定做
Other can be customized

- 适用于 SVS-40 系列电液螺纹插装阀
- 螺纹连接，线圈可实现免停机更换
- 配备手动应急装置
- 线圈内孔 ϕ19，全塑封工艺

- Applicable to SVS-40 Series of electro-hydraulic threaded cartridge valves
- Threaded connection, coil can be replaced without stopping
- Equipped with manual emergency device
- Coil inner hole ϕ 19. All-plastic sealing process

外形及连接尺寸
Outline and connection dimensions

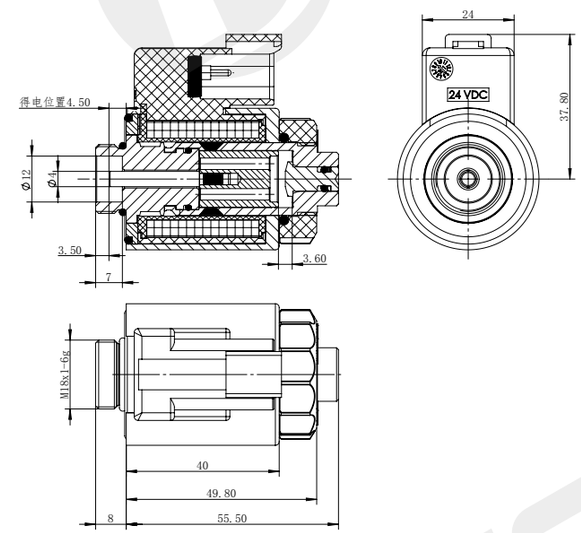

技术参数 /technical parameter		
环境温度 Ambient temperature	°C	-25~50
电压波动范围 Voltage fluctuation range	%	85~110
额定功率 Rated power	W	20
额定行程 Rated stroke	mm	2.5
全行程 Full stroke	mm	⩾ 3.6
工作油压 Working oil pressure	Mpa	⩽ 35
防护等级 Degree of protection		IP67
操作频率 Operating frequency	T/h	12000
通电持续率 Power on duration	%	100
绝缘等级 Insulation class		H(180)
电气连接方式 Electrical connection mode		DT04-2P

力 - 位移特性曲线
F-S characteristic curve

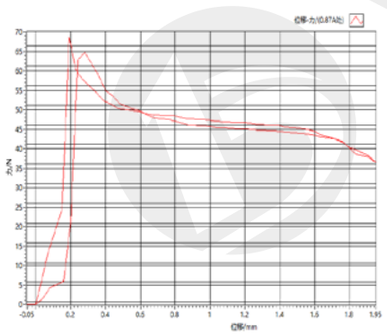

注意事项
matters needing attention

1. 线圈不得单独通电使用，有烧损风险！
2. 非防爆线圈，不得使用在有爆炸危险的介质中！
3. 线圈安装后，必须接地可靠，否则有触电危险！

1. The coil shall not be powered on alone, which has the risk of burning!
2. Non explosion-proof coil shall not be used in medium with explosion risk!
3. After the coil is installed, it must be grounded reliably, otherwise there is a risk of electric shock！

样本数据来源于试验室环境，仅供参考，贵公司如需最新数据或有特殊需求，欢迎联系搏业液压工程师。
The sample data comes from the laboratory environment and is only for reference. If your company needs the latest data or has special needs, please contact Boye hydraulic engineer.

BYM10-40R-01G

螺纹插装阀用电磁铁
Solenoid for threaded cartridge valve

DC 12V
DC 24V

其它规格可定做
Other can be customized

- 适用于 SVS-40 系列电液螺纹插装阀
- 螺纹连接，线圈可实现免停机更换
- 配备手动调整装置
- 线圈内孔 ϕ19，全塑封工艺

- Applicable to SVS-40 Series of electro-hydraulic threaded cartridge valves
- Threaded connection, coil can be replaced without stopping
- Equipped with manual adjustment device
- Coil inner hole ϕ 19. All-plastic sealing process

外形及连接尺寸
Outline and connection dimensions

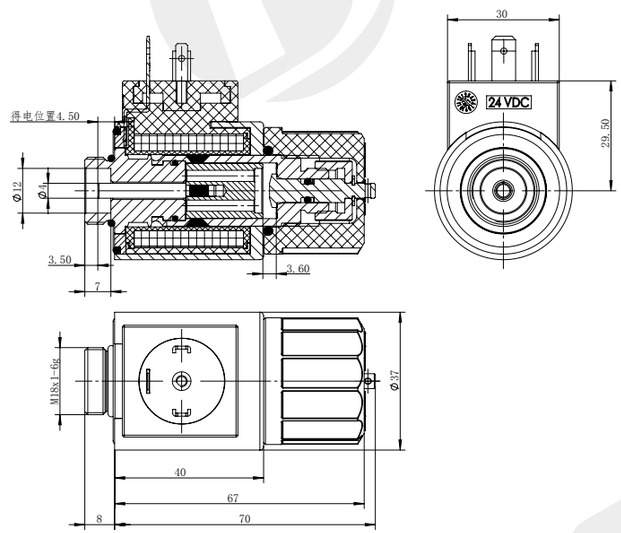

技术参数 /technical parameter		
环境温度 Ambient temperature	℃	-25~50
电压波动范围 Voltage fluctuation range	%	85~110
额定功率 Rated power	W	20
额定行程 Rated stroke	mm	2.5
全行程 Full stroke	mm	⩾ 3.6
工作油压 Working oil pressure	Mpa	⩽ 35
防护等级 Degree of protection		IP65
操作频率 Operating frequency	T/h	12000
通电持续率 Power on duration	%	100
绝缘等级 Insulation class		H(180)
电气连接方式 Electrical connection mode		DIN43650

力 - 位移特性曲线
F-S characteristic curve

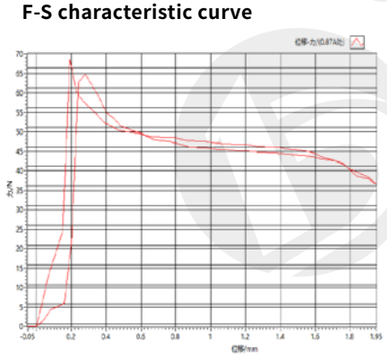

注意事项
matters needing attention

1. 线圈不得单独通电使用，有烧损风险！
2. 非防爆线圈，不得使用在有爆炸危险的介质中！
3. 线圈安装后，必须接地可靠，否则有触电危险！

1. The coil shall not be powered on alone, which has the risk of burning!
2. Non explosion-proof coil shall not be used in medium with explosion risk!
3. After the coil is installed, it must be grounded reliably, otherwise there is a risk of electric shock！

样本数据来源于试验室环境，仅供参考，贵公司如需最新数据或有特殊需求，欢迎联系搏业液压工程师。
The sample data comes from the laboratory environment and is only for reference. If your company needs the latest data or has special needs, please contact Boye hydraulic engineer.

BYM10-40R-01D

螺纹插装阀用电磁铁
Solenoid for threaded cartridge valve

DC 12V
DC 24V

其它规格可定做
Other can be customized

- 适用于 SVS-40 系列电液螺纹插装阀
- 螺纹连接，线圈可实现免停机更换
- 配备手动调整装置
- 线圈内孔 ϕ19，全塑封工艺

- Applicable to SVS-40 Series of electro-hydraulic threaded cartridge valves
- Threaded connection, coil can be replaced without stopping
- Equipped with manual adjustment device
- Coil inner hole ϕ 19. All-plastic sealing process

外形及连接尺寸
Outline and connection dimensions

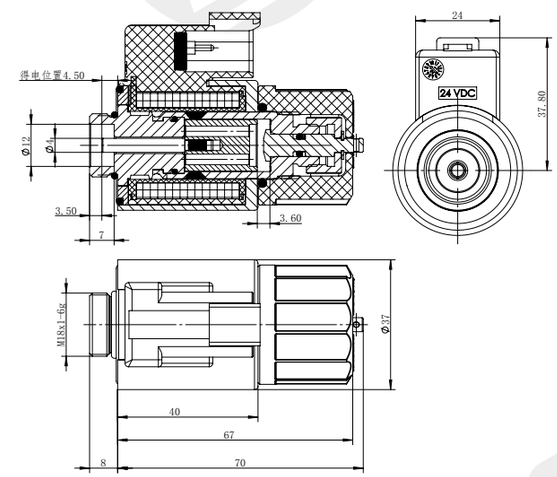

技术参数 /technical parameter		
环境温度 Ambient temperature	℃	-25~50
电压波动范围 Voltage fluctuation range	%	85~110
额定功率 Rated power	W	20
额定行程 Rated stroke	mm	2.5
全行程 Full stroke	mm	⩾ 3.6
工作油压 Working oil pressure	Mpa	⩽ 35
防护等级 Degree of protection		IP67
操作频率 Operating frequency	T/h	12000
通电持续率 Power on duration	%	100
绝缘等级 Insulation class		H(180)
电气连接方式 Electrical connection mode		DT04-2P

力 - 位移特性曲线
F-S characteristic curve

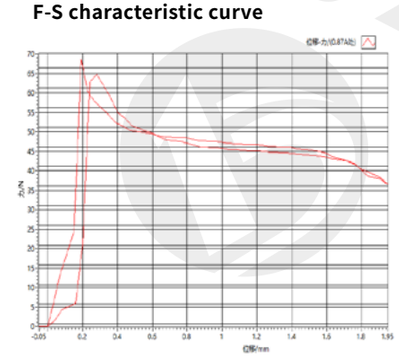

注意事项
matters needing attention

1. 线圈不得单独通电使用，有烧损风险！
2. 非防爆线圈，不得使用在有爆炸危险的介质中！
3. 线圈安装后，必须接地可靠，否则有触电危险！

1. The coil shall not be powered on alone, which has the risk of burning!
2. Non explosion-proof coil shall not be used in medium with explosion risk!
3. After the coil is installed, it must be grounded reliably, otherwise there is a risk of electric shock！

样本数据来源于试验室环境，仅供参考，贵公司如需最新数据或有特殊需求，欢迎联系搏业液压工程师。
The sample data comes from the laboratory environment and is only for reference. If your company needs the latest data or has special needs, please contact Boye hydraulic engineer.

BYM10-50-01G

螺纹插装阀用电磁铁

Solenoid for threaded cartridge valve

DC 12V
DC 24V

其它规格可定做
Other can be customized

- 适用于 SVS-50 系列电液螺纹插装阀
- 螺纹连接，线圈可实现免停机更换
- 线圈内孔 ϕ19，全塑封工艺

- Applicable to SVS-50 Series of electro-hydraulic threaded cartridge valves
- Threaded connection, coil can be replaced without stopping
- Coil inner hole ϕ 19. All-plastic sealing process

外形及连接尺寸

Outline and connection dimensions

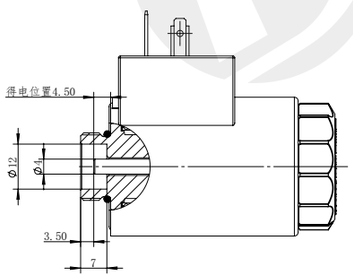

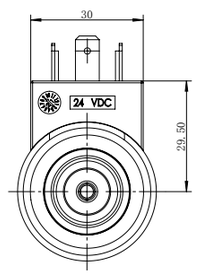

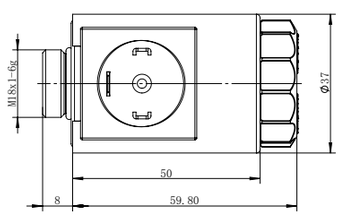

技术参数 /technical parameter		
环境温度 Ambient temperature	℃	-25~50
电压波动范围 Voltage fluctuation range	%	85~110
额定功率 Rated power	W	25
额定行程 Rated stroke	mm	2.5
全行程 Full stroke	mm	⩾ 3.6
工作油压 Working oil pressure	Mpa	⩽ 35
防护等级 Degree of protection		IP65
操作频率 Operating frequency	T/h	12000
通电持续率 Power on duration	%	100
绝缘等级 Insulation class		H(180)
电气连接方式 Electrical connection mode		DIN43650

力 - 位移特性曲线

F-S characteristic curve

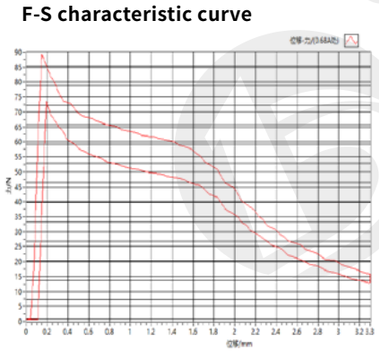

注意事项

matters needing attention

1. 线圈不得单独通电使用，有烧损风险！
2. 非防爆线圈，不得使用在有爆炸危险的介质中！
3. 线圈安装后，必须接地可靠，否则有触电危险！

1. The coil shall not be powered on alone, which has the risk of burning!
2. Non explosion-proof coil shall not be used in medium with explosion risk!
3. After the coil is installed, it must be grounded reliably, otherwise there is a risk of electric shock！

样本数据来源于试验室环境，仅供参考，贵公司如需最新数据或有特殊需求，欢迎联系搏业液压工程师。
The sample data comes from the laboratory environment and is only for reference. If your company needs the latest data or has special needs, please contact Boye hydraulic engineer.

BYM10-50-01D

螺纹插装阀用电磁铁

Solenoid for threaded cartridge valve

DC 12V
DC 24V

其它规格可定做
Other can be customized

- 适用于 SVS-50 系列电液螺纹插装阀
- 螺纹连接，线圈可实现免停机更换
- 线圈内孔 ϕ19，全塑封工艺

- Applicable to SVS-50 Series of electro-hydraulic threaded cartridge valves
- Threaded connection, coil can be replaced without stopping
- Coil inner hole ϕ 19. All-plastic sealing process

外形及连接尺寸

Outline and connection dimensions

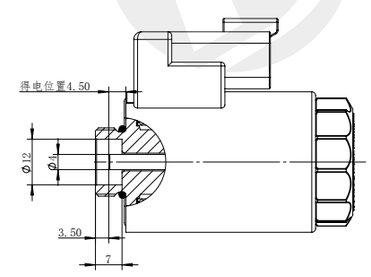

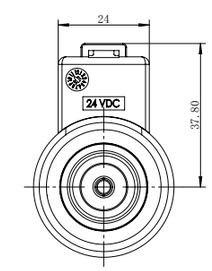

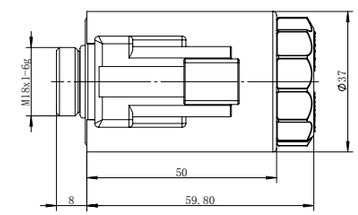

技术参数 /technical parameter		
环境温度 Ambient temperature	℃	-25~50
电压波动范围 Voltage fluctuation range	%	85~110
额定功率 Rated power	W	25
额定行程 Rated stroke	mm	2.5
全行程 Full stroke	mm	⩾ 3.6
工作油压 Working oil pressure	Mpa	⩽ 35
防护等级 Degree of protection		IP67
操作频率 Operating frequency	T/h	12000
通电持续率 Power on duration	%	100
绝缘等级 Insulation class		H(180)
电气连接方式 Electrical connection mode		DT04-2P

力 - 位移特性曲线

F-S characteristic curve

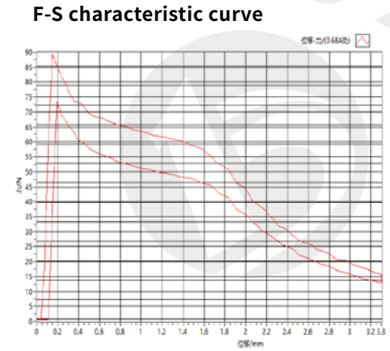

注意事项

matters needing attention

1. 线圈不得单独通电使用，有烧损风险！
2. 非防爆线圈，不得使用在有爆炸危险的介质中！
3. 线圈安装后，必须接地可靠，否则有触电危险！

1. The coil shall not be powered on alone, which has the risk of burning!
2. Non explosion-proof coil shall not be used in medium with explosion risk!
3. After the coil is installed, it must be grounded reliably, otherwise there is a risk of electric shock！

样本数据来源于试验室环境，仅供参考，贵公司如需最新数据或有特殊需求，欢迎联系搏业液压工程师。
The sample data comes from the laboratory environment and is only for reference. If your company needs the latest data or has special needs, please contact Boye hydraulic engineer.

BYM10-50M-01G

螺纹插装阀用电磁铁
Solenoid for threaded cartridge valve

DC 12V
DC 24V

其它规格可定做
Other can be customized

- 适用于 SVS-50 系列电液螺纹插装阀
- 螺纹连接，线圈可实现免停机更换
- 配备手动应急装置
- 线圈内孔 ϕ19，全塑封工艺

- Applicable to SVS-50 Series of electro-hydraulic threaded cartridge valves
- Threaded connection, coil can be replaced without stopping
- Equipped with manual emergency device
- Coil inner hole ϕ 19. All-plastic sealing process

外形及连接尺寸
Outline and connection dimensions

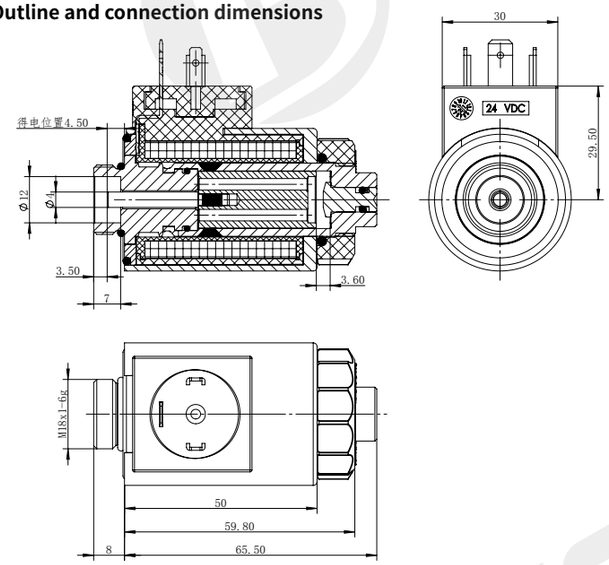

技术参数 /technical parameter		
环境温度 Ambient temperature	℃	-25~50
电压波动范围 Voltage fluctuation range	%	85~110
额定功率 Rated power	W	25
额定行程 Rated stroke	mm	2.5
全行程 Full stroke	mm	⩾ 3.6
工作油压 Working oil pressure	Mpa	⩽ 35
防护等级 Degree of protection		IP65
操作频率 Operating frequency	T/h	12000
通电持续率 Power on duration	%	100
绝缘等级 Insulation class		H(180)
电气连接方式 Electrical connection mode		DIN43650

力 - 位移特性曲线
F-S characteristic curve

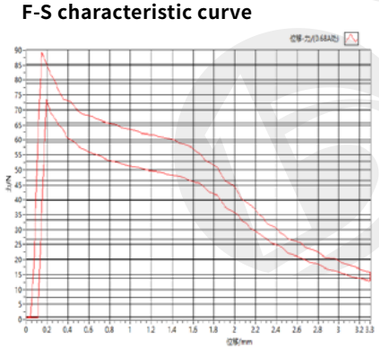

注意事项
matters needing attention

1. 线圈不得单独通电使用，有烧损风险！
2. 非防爆线圈，不得使用在有爆炸危险的介质中！
3. 线圈安装后，必须接地可靠，否则有触电危险！

1. The coil shall not be powered on alone, which has the risk of burning!
2. Non explosion-proof coil shall not be used in medium with explosion risk!
3. After the coil is installed, it must be grounded reliably, otherwise there is a risk of electric shock！

样本数据来源于试验室环境，仅供参考，贵公司如需最新数据或有特殊需求，欢迎联系搏业液压工程师。
The sample data comes from the laboratory environment and is only for reference. If your company needs the latest data or has special needs, please contact Boye hydraulic engineer.

BYM10-50M-01D

螺纹插装阀用电磁铁
Solenoid for threaded cartridge valve

DC 12V
DC 24V

其它规格可定做
Other can be customized

- 适用于 SVS-50 系列电液螺纹插装阀
- 螺纹连接，线圈可实现免停机更换
- 配备手动应急装置
- 线圈内孔 ϕ19，全塑封工艺

- Applicable to SVS-50 Series of electro-hydraulic threaded cartridge valves
- Threaded connection, coil can be replaced without stopping
- Equipped with manual emergency device
- Coil inner hole ϕ 19. All-plastic sealing process

外形及连接尺寸
Outline and connection dimensions

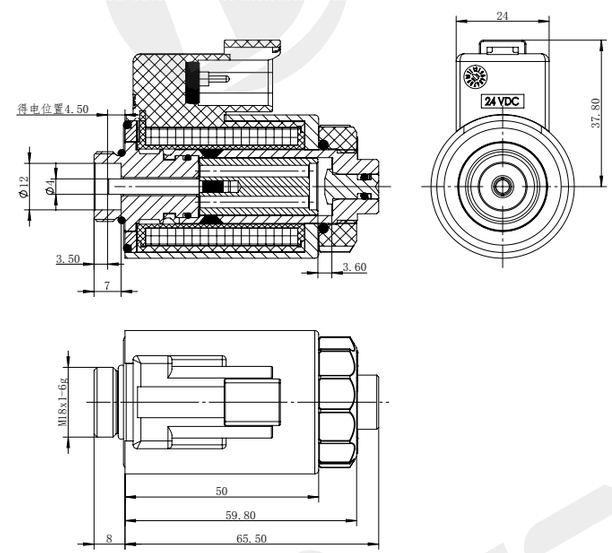

技术参数 /technical parameter		
环境温度 Ambient temperature	℃	-25~50
电压波动范围 Voltage fluctuation range	%	85~110
额定功率 Rated power	W	25
额定行程 Rated stroke	mm	2.5
全行程 Full stroke	mm	⩾ 3.6
工作油压 Working oil pressure	Mpa	⩽ 35
防护等级 Degree of protection		IP67
操作频率 Operating frequency	T/h	12000
通电持续率 Power on duration	%	100
绝缘等级 Insulation class		H(180)
电气连接方式 Electrical connection mode		DT04-2P

力 - 位移特性曲线
F-S characteristic curve

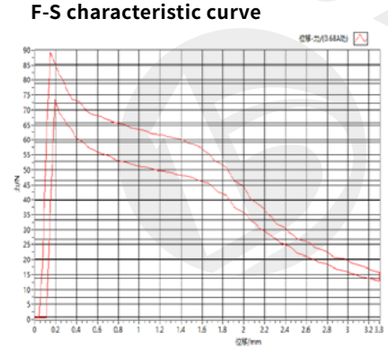

注意事项
matters needing attention

1. 线圈不得单独通电使用，有烧损风险！
2. 非防爆线圈，不得使用在有爆炸危险的介质中！
3. 线圈安装后，必须接地可靠，否则有触电危险！

1. The coil shall not be powered on alone, which has the risk of burning!
2. Non explosion-proof coil shall not be used in medium with explosion risk!
3. After the coil is installed, it must be grounded reliably, otherwise there is a risk of electric shock！

样本数据来源于试验室环境，仅供参考，贵公司如需最新数据或有特殊需求，欢迎联系搏业液压工程师。
The sample data comes from the laboratory environment and is only for reference. If your company needs the latest data or has special needs, please contact Boye hydraulic engineer.

BYM10-50R-01G

螺纹插装阀用电磁铁

Solenoid for threaded cartridge valve

DC 12V
DC 24V

其它规格可定做
Other can be customized

- 适用于 SVS-50 系列电液螺纹插装阀
- 螺纹连接，线圈可实现免停机更换
- 配备手动调整装置
- 线圈内孔 ϕ19，全塑封工艺

- Applicable to SVS-50 Series of electro-hydraulic threaded cartridge valves
- Threaded connection, coil can be replaced without stopping
- Equipped with manual adjustment device
- Coil inner hole ϕ 19. All-plastic sealing process

外形及连接尺寸

Outline and connection dimensions

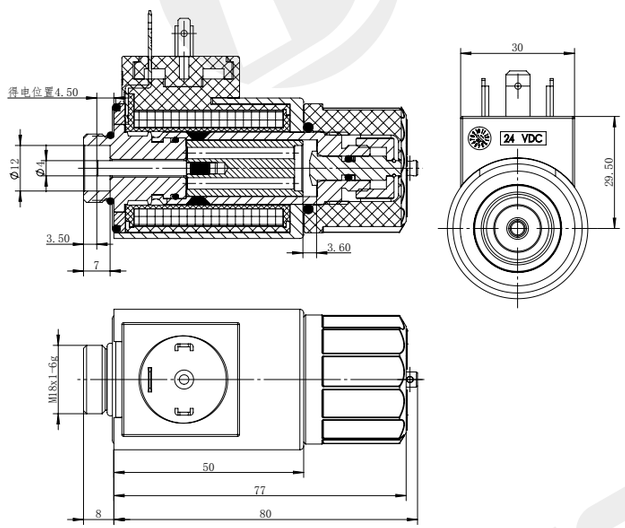

技术参数 /technical parameter		
环境温度 Ambient temperature	°C	-25~50
电压波动范围 Voltage fluctuation range	%	85~110
额定功率 Rated power	W	25
额定行程 Rated stroke	mm	2.5
全行程 Full stroke	mm	⩾ 3.6
工作油压 Working oil pressure	Mpa	⩽ 35
防护等级 Degree of protection		IP65
操作频率 Operating frequency	T/h	12000
通电持续率 Power on duration	%	100
绝缘等级 Insulation class		H(180)
电气连接方式 Electrical connection mode		DIN43650

力 - 位移特性曲线

F-S characteristic curve

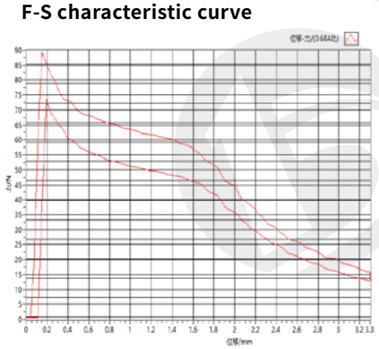

注意事项

matters needing attention

1. 线圈不得单独通电使用，有烧损风险！
2. 非防爆线圈，不得使用在有爆炸危险的介质中！
3. 线圈安装后，必须接地可靠，否则有触电危险！

1. The coil shall not be powered on alone, which has the risk of burning!
2. Non explosion-proof coil shall not be used in medium with explosion risk!
3. After the coil is installed, it must be grounded reliably, otherwise there is a risk of electric shock！

样本数据来源于试验室环境，仅供参考，贵公司如需最新数据或有特殊需求，欢迎联系搏业液压工程师。
The sample data comes from the laboratory environment and is only for reference. If your company needs the latest data or has special needs, please contact Boye hydraulic engineer.

BYM10-50R-01D

螺纹插装阀用电磁铁

Solenoid for threaded cartridge valve

DC 12V
DC 24V

其它规格可定做
Other can be customized

- 适用于 SVS-50 系列电液螺纹插装阀
- 螺纹连接，线圈可实现免停机更换
- 配备手动调整装置
- 线圈内孔 ϕ19，全塑封工艺

- Applicable to SVS-50 Series of electro-hydraulic threaded cartridge valves
- Threaded connection, coil can be replaced without stopping
- Equipped with manual adjustment device
- Coil inner hole ϕ 19. All-plastic sealing process

外形及连接尺寸

Outline and connection dimensions

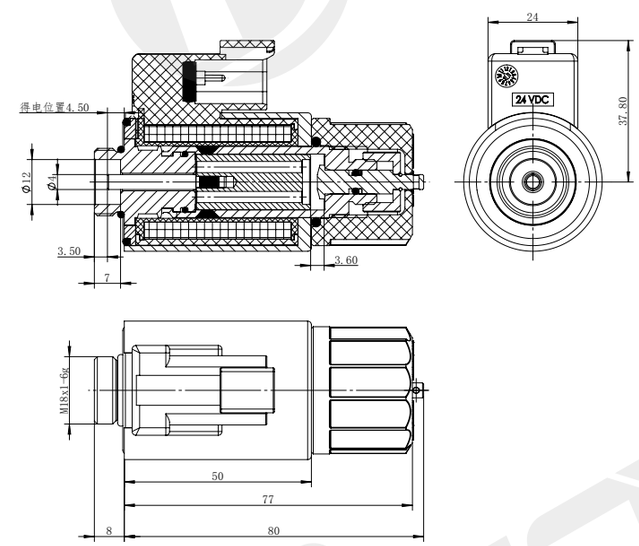

技术参数 /technical parameter		
环境温度 Ambient temperature	°C	-25~50
电压波动范围 Voltage fluctuation range	%	85~110
额定功率 Rated power	W	25
额定行程 Rated stroke	mm	2.5
全行程 Full stroke	mm	⩾ 3.6
工作油压 Working oil pressure	Mpa	⩽ 35
防护等级 Degree of protection		IP67
操作频率 Operating frequency	T/h	12000
通电持续率 Power on duration	%	100
绝缘等级 Insulation class		H(180)
电气连接方式 Electrical connection mode		DT04-2P

力 - 位移特性曲线

F-S characteristic curve

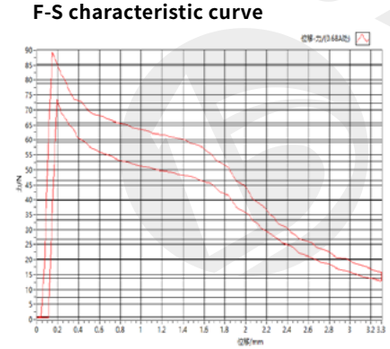

注意事项

matters needing attention

1. 线圈不得单独通电使用，有烧损风险！
2. 非防爆线圈，不得使用在有爆炸危险的介质中！
3. 线圈安装后，必须接地可靠，否则有触电危险！

1. The coil shall not be powered on alone, which has the risk of burning!
2. Non explosion-proof coil shall not be used in medium with explosion risk!
3. After the coil is installed, it must be grounded reliably, otherwise there is a risk of electric shock！

样本数据来源于试验室环境，仅供参考，贵公司如需最新数据或有特殊需求，欢迎联系搏业液压工程师。
The sample data comes from the laboratory environment and is only for reference. If your company needs the latest data or has special needs, please contact Boye hydraulic engineer.

BYM11-40-01G

螺纹插装阀用电磁铁

Solenoid for threaded cartridge valve

DC 12V
DC 24V

其它规格可定做
Other can be customized

- 适用于 SVT-40 系列电液螺纹插装阀
- 螺纹连接，线圈可实现免停机更换
- 线圈内孔 ϕ19，全塑封工艺

- Applicable to SVT-40 Series of electro-hydraulic threaded cartridge valves
- Threaded connection, coil can be replaced without stopping
- Coil inner hole ϕ 19. All-plastic sealing process

外形及连接尺寸

Outline and connection dimensions

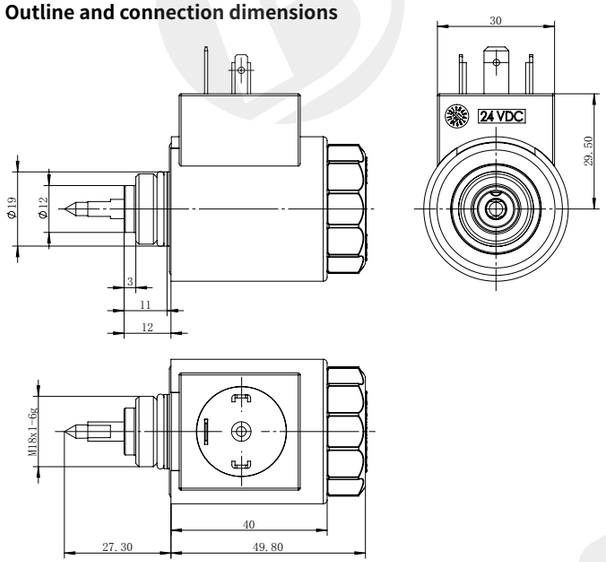

技术参数 /technical parameter		
环境温度 Ambient temperature	°C	-25~50
电压波动范围 Voltage fluctuation range	%	85~110
额定功率 Rated power	W	20
额定行程 Rated stroke	mm	2
全行程 Full stroke	mm	⩾ 3
工作油压 Working oil pressure	Mpa	⩽ 35
防护等级 Degree of protection		IP65
操作频率 Operating frequency	T/h	12000
通电持续率 Power on duration	%	100
绝缘等级 Insulation class		H(180)
电气连接方式 Electrical connection mode		DIN43650

力 - 位移特性曲线

F-S characteristic curve

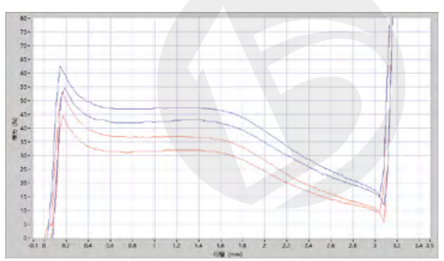

注意事项

matters needing attention

1. 线圈不得单独通电使用，有烧损风险！
2. 非防爆线圈，不得使用在有爆炸危险的介质中！
3. 线圈安装后，必须接地可靠，否则有触电危险！

1. The coil shall not be powered on alone, which has the risk of burning!
2. Non explosion-proof coil shall not be used in medium with explosion risk!
3. After the coil is installed, it must be grounded reliably, otherwise there is a risk of electric shock！

样本数据来源于试验室环境，仅供参考，贵公司如需最新数据或有特殊需求，欢迎联系搏业液压工程师。
The sample data comes from the laboratory environment and is only for reference. If your company needs the latest data or has special needs, please contact Boye hydraulic engineer.

BYM11-40-01D

螺纹插装阀用电磁铁

Solenoid for threaded cartridge valve

DC 12V
DC 24V

其它规格可定做
Other can be customized

- 适用于 SVT-40 系列电液螺纹插装阀
- 螺纹连接，线圈可实现免停机更换
- 线圈内孔 ϕ19，全塑封工艺

- Applicable to SVT-40 Series of electro-hydraulic threaded cartridge valves
- SVTThreaded connection, coil can be replaced without stopping
- Coil inner hole ϕ 19. All-plastic sealing process

外形及连接尺寸

Outline and connection dimensions

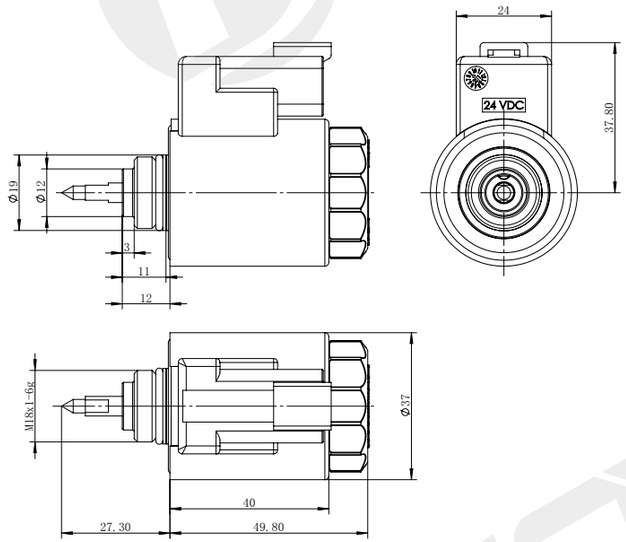

技术参数 /technical parameter		
环境温度 Ambient temperature	°C	-25~50
电压波动范围 Voltage fluctuation range	%	85~110
额定功率 Rated power	W	25
额定行程 Rated stroke	mm	2.5
全行程 Full stroke	mm	⩾ 3.6
工作油压 Working oil pressure	Mpa	⩽ 35
防护等级 Degree of protection		IP67
操作频率 Operating frequency	T/h	12000
通电持续率 Power on duration	%	100
绝缘等级 Insulation class		H(180)
电气连接方式 Electrical connection mode		DT04-2P

力 - 位移特性曲线

F-S characteristic curve

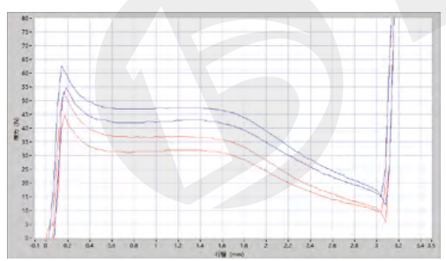

注意事项

matters needing attention

1. 线圈不得单独通电使用，有烧损风险！
2. 非防爆线圈，不得使用在有爆炸危险的介质中！
3. 线圈安装后，必须接地可靠，否则有触电危险！

1. The coil shall not be powered on alone, which has the risk of burning!
2. Non explosion-proof coil shall not be used in medium with explosion risk!
3. After the coil is installed, it must be grounded reliably, otherwise there is a risk of electric shock！

样本数据来源于试验室环境，仅供参考，贵公司如需最新数据或有特殊需求，欢迎联系搏业液压工程师。
The sample data comes from the laboratory environment and is only for reference. If your company needs the latest data or has special needs, please contact Boye hydraulic engineer.

BYM11-40R-01G

螺纹插装阀用电磁铁
Solenoid for threaded cartridge valve

DC 12V
DC 24V

其它规格可定做
Other can be customized

- 适用于 SVT-40 系列电液螺纹插装阀
- 螺纹连接，线圈可实现免停机更换
- 配备手动调整装置
- 线圈内孔 ϕ19，全塑封工艺

- Applicable to SVT-40 Series of electro-hydraulic threaded cartridge valves
- Threaded connection, coil can be replaced without stopping
- Equipped with manual adjustment device
- Coil inner hole ϕ 19. All-plastic sealing process

外形及连接尺寸
Outline and connection dimensions

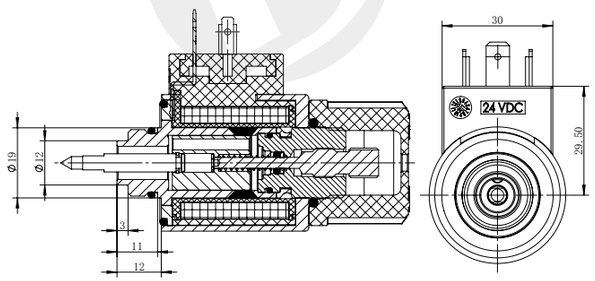

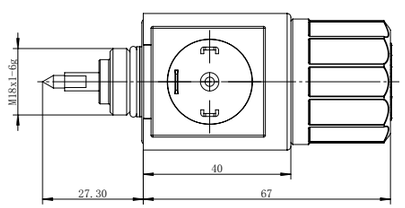

技术参数 /technical parameter		
环境温度 Ambient temperature	°C	-25~50
电压波动范围 Voltage fluctuation range	%	85~110
额定功率 Rated power	W	20
额定行程 Rated stroke	mm	2
全行程 Full stroke	mm	⩾ 3
工作油压 Working oil pressure	Mpa	⩽ 35
防护等级 Degree of protection		IP65
操作频率 Operating frequency	T/h	12000
通电持续率 Power on duration	%	100
绝缘等级 Insulation class		H(180)
电气连接方式 Electrical connection mode		DIN43650

力 - 位移特性曲线
F-S characteristic curve

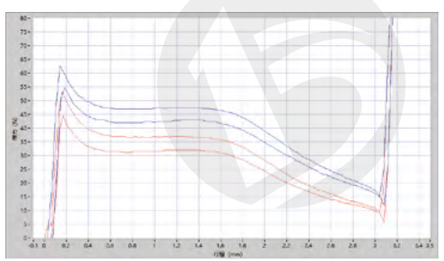

注意事项
matters needing attention

1. 线圈不得单独通电使用，有烧损风险！
2. 非防爆线圈，不得使用在有爆炸危险的介质中！
3. 线圈安装后，必须接地可靠，否则有触电危险！

1. The coil shall not be powered on alone, which has the risk of burning!
2. Non explosion-proof coil shall not be used in medium with explosion risk!
3. After the coil is installed, it must be grounded reliably, otherwise there is a risk of electric shock！

样本数据来源于试验室环境，仅供参考，贵公司如需最新数据或有特殊需求，欢迎联系搏业液压工程师。
The sample data comes from the laboratory environment and is only for reference. If your company needs the latest data or has special needs, please contact Boye hydraulic engineer.

BYM11-40R-01D

螺纹插装阀用电磁铁
Solenoid for threaded cartridge valve

DC 12V
DC 24V

其它规格可定做
Other can be customized

- 适用于 SVT-40 系列电液螺纹插装阀
- 螺纹连接，线圈可实现免停机更换
- 配备手动调整装置
- 线圈内孔 ϕ19，全塑封工艺

- Applicable to SVT-40 Series of electro-hydraulic threaded cartridge valves
- Threaded connection, coil can be replaced without stopping
- Equipped with manual adjustment device
- Coil inner hole ϕ 19. All-plastic sealing process

外形及连接尺寸
Outline and connection dimensions

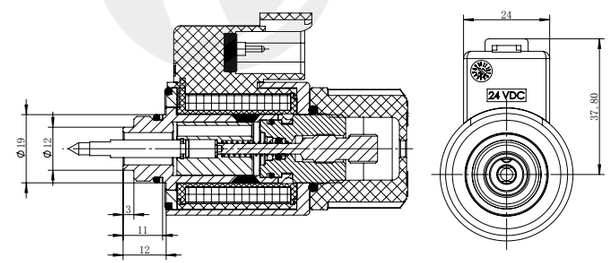

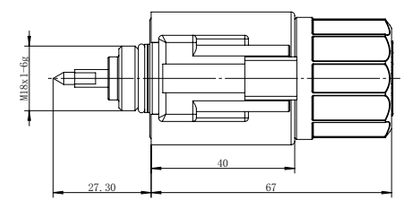

技术参数 /technical parameter		
环境温度 Ambient temperature	°C	-25~50
电压波动范围 Voltage fluctuation range	%	85~110
额定功率 Rated power	W	20
额定行程 Rated stroke	mm	2
全行程 Full stroke	mm	⩾ 3
工作油压 Working oil pressure	Mpa	⩽ 35
防护等级 Degree of protection		IP67
操作频率 Operating frequency	T/h	12000
通电持续率 Power on duration	%	100
绝缘等级 Insulation class		H(180)
电气连接方式 Electrical connection mode		DT04-2P

力 - 位移特性曲线
F-S characteristic curve

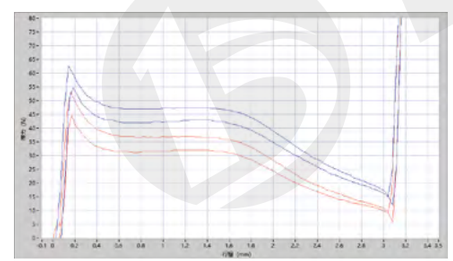

注意事项
matters needing attention

1. 线圈不得单独通电使用，有烧损风险！
2. 非防爆线圈，不得使用在有爆炸危险的介质中！
3. 线圈安装后，必须接地可靠，否则有触电危险！

1. The coil shall not be powered on alone, which has the risk of burning!
2. Non explosion-proof coil shall not be used in medium with explosion risk!
3. After the coil is installed, it must be grounded reliably, otherwise there is a risk of electric shock！

样本数据来源于试验室环境，仅供参考，贵公司如需最新数据或有特殊需求，欢迎联系搏业液压工程师。
The sample data comes from the laboratory environment and is only for reference. If your company needs the latest data or has special needs, please contact Boye hydraulic engineer.

BYM12-40-01G

螺纹插装阀用电磁铁

Solenoid for threaded cartridge valve

DC 12V
DC 24V

其它规格可定做
Other can be customized

- 适用于 SVK-40 系列电液螺纹插装阀
- 螺纹连接，线圈可实现免停机更换
- 线圈内孔 ϕ19，全塑封工艺

- Applicable to SVK-40 Series of electro-hydraulic threaded cartridge valves
- Threaded connection, coil can be replaced without stopping
- Coil inner hole ϕ 19. All-plastic sealing process

外形及连接尺寸

Outline and connection dimensions

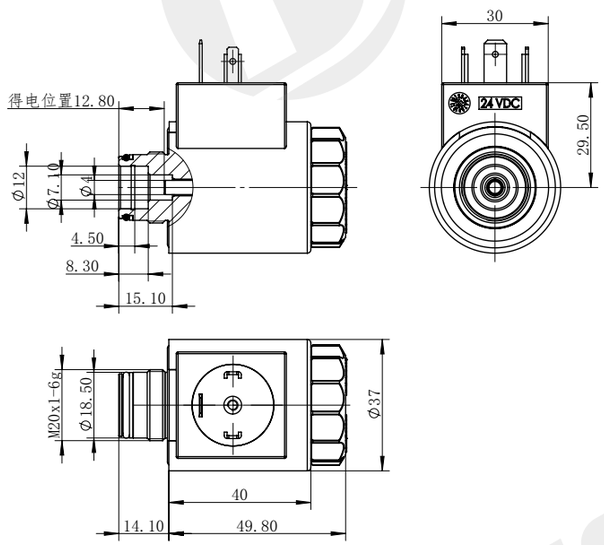

技术参数 /technical parameter		
环境温度 Ambient temperature	°C	-25~50
电压波动范围 Voltage fluctuation range	%	85~110
额定功率 Rated power	W	20
额定行程 Rated stroke	mm	2.5
全行程 Full stroke	mm	⩾ 3.6
工作油压 Working oil pressure	Mpa	⩽ 35
防护等级 Degree of protection		IP65
操作频率 Operating frequency	T/h	12000
通电持续率 Power on duration	%	100
绝缘等级 Insulation class		H(180)
电气连接方式 Electrical connection mode		DIN43650

力 - 位移特性曲线

F-S characteristic curve

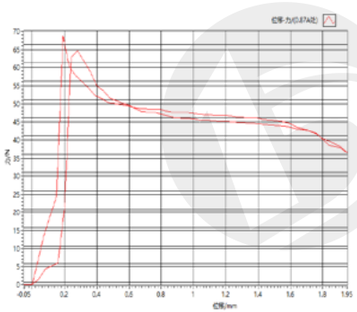

注意事项

matters needing attention

1. 线圈不得单独通电使用，有烧损风险！
2. 非防爆线圈，不得使用在有爆炸危险的介质中！
3. 线圈安装后，必须接地可靠，否则有触电危险！

1. The coil shall not be powered on alone, which has the risk of burning!
2. Non explosion-proof coil shall not be used in medium with explosion risk!
3. After the coil is installed, it must be grounded reliably, otherwise there is a risk of electric shock！

样本数据来源于试验室环境，仅供参考，贵公司如需最新数据或有特殊需求，欢迎联系搏业液压工程师。
The sample data comes from the laboratory environment and is only for reference. If your company needs the latest data or has special needs, please contact Boye hydraulic engineer.

BYM12-40-01D

螺纹插装阀用电磁铁

Solenoid for threaded cartridge valve

DC 12V
DC 24V

其它规格可定做
Other can be customized

- 适用于 SVK-40 系列电液螺纹插装阀
- 螺纹连接，线圈可实现免停机更换
- 线圈内孔 ϕ19，全塑封工艺

- Applicable to SVK-40 Series of electro-hydraulic threaded cartridge valves
- Threaded connection, coil can be replaced without stopping
- Coil inner hole ϕ 19. All-plastic sealing process

外形及连接尺寸

Outline and connection dimensions

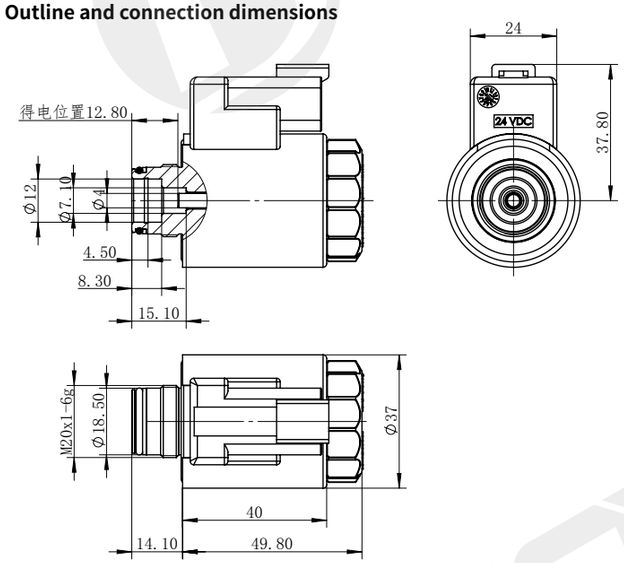

技术参数 /technical parameter		
环境温度 Ambient temperature	°C	-25~50
电压波动范围 Voltage fluctuation range	%	85~110
额定功率 Rated power	W	20
额定行程 Rated stroke	mm	2.5
全行程 Full stroke	mm	⩾ 3.6
工作油压 Working oil pressure	Mpa	⩽ 35
防护等级 Degree of protection		IP67
操作频率 Operating frequency	T/h	12000
通电持续率 Power on duration	%	100
绝缘等级 Insulation class		H(180)
电气连接方式 Electrical connection mode		DT04-2P

力 - 位移特性曲线

F-S characteristic curve

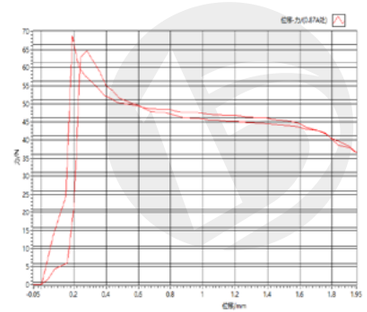

注意事项

matters needing attention

1. 线圈不得单独通电使用，有烧损风险！
2. 非防爆线圈，不得使用在有爆炸危险的介质中！
3. 线圈安装后，必须接地可靠，否则有触电危险！

1. The coil shall not be powered on alone, which has the risk of burning!
2. Non explosion-proof coil shall not be used in medium with explosion risk!
3. After the coil is installed, it must be grounded reliably, otherwise there is a risk of electric shock！

样本数据来源于试验室环境，仅供参考，贵公司如需最新数据或有特殊需求，欢迎联系搏业液压工程师。
The sample data comes from the laboratory environment and is only for reference. If your company needs the latest data or has special needs, please contact Boye hydraulic engineer.

BYM12-40M-01G

螺纹插装阀用电磁铁
Solenoid for threaded cartridge valve

DC 12V
DC 24V

其它规格可定做
Other can be customized

- 适用于 SVK-40 系列电液螺纹插装阀
- 螺纹连接，线圈可实现免停机更换
- 配备手动应急装置
- 线圈内孔 ϕ19，全塑封工艺

- Applicable to SVK-40 Series of electro-hydraulic threaded cartridge valves
- Threaded connection, coil can be replaced without stopping
- Equipped with manual emergency device
- Coil inner hole ϕ 19. All-plastic sealing process

外形及连接尺寸
Outline and connection dimensions

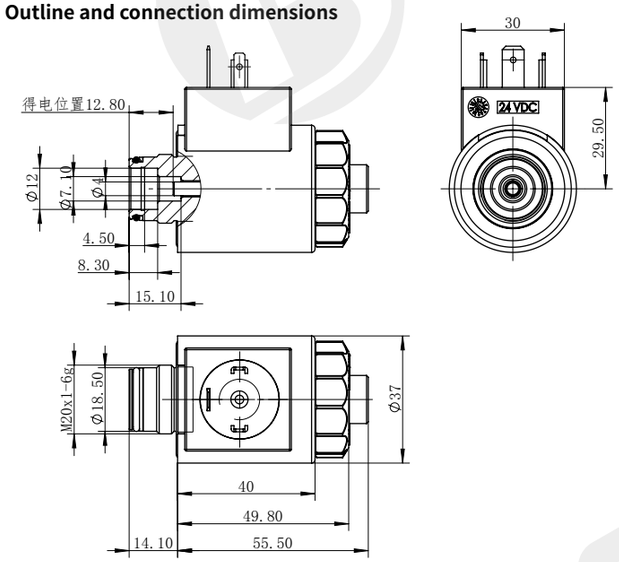

技术参数 /technical parameter		
环境温度 Ambient temperature	°C	-25~50
电压波动范围 Voltage fluctuation range	%	85~110
额定功率 Rated power	W	20
额定行程 Rated stroke	mm	2.5
全行程 Full stroke	mm	⩾ 3.6
工作油压 Working oil pressure	Mpa	⩽ 35
防护等级 Degree of protection		IP65
操作频率 Operating frequency	T/h	12000
通电持续率 Power on duration	%	100
绝缘等级 Insulation class		H(180)
电气连接方式 Electrical connection mode		DIN43650

力 - 位移特性曲线
F-S characteristic curve

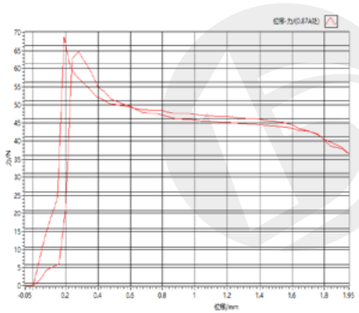

注意事项
matters needing attention

1. 线圈不得单独通电使用，有烧损风险！
2. 非防爆线圈，不得使用在有爆炸危险的介质中！
3. 线圈安装后，必须接地可靠，否则有触电危险！

1. The coil shall not be powered on alone, which has the risk of burning!
2. Non explosion-proof coil shall not be used in medium with explosion risk!
3. After the coil is installed, it must be grounded reliably, otherwise there is a risk of electric shock！

样本数据来源于试验室环境，仅供参考，贵公司如需最新数据或有特殊需求，欢迎联系搏业液压工程师。
The sample data comes from the laboratory environment and is only for reference. If your company needs the latest data or has special needs, please contact Boye hydraulic engineer.

BYM12-40M-01D

螺纹插装阀用电磁铁
Solenoid for threaded cartridge valve

DC 12V
DC 24V

其它规格可定做
Other can be customized

- 适用于 SVK-40 系列电液螺纹插装阀
- 螺纹连接，线圈可实现免停机更换
- 配备手动应急装置
- 线圈内孔 ϕ19，全塑封工艺

- Applicable to SVK-40 Series of electro-hydraulic threaded cartridge valves
- Threaded connection, coil can be replaced without stopping
- Equipped with manual emergency device
- Coil inner hole ϕ 19. All-plastic sealing process

外形及连接尺寸
Outline and connection dimensions

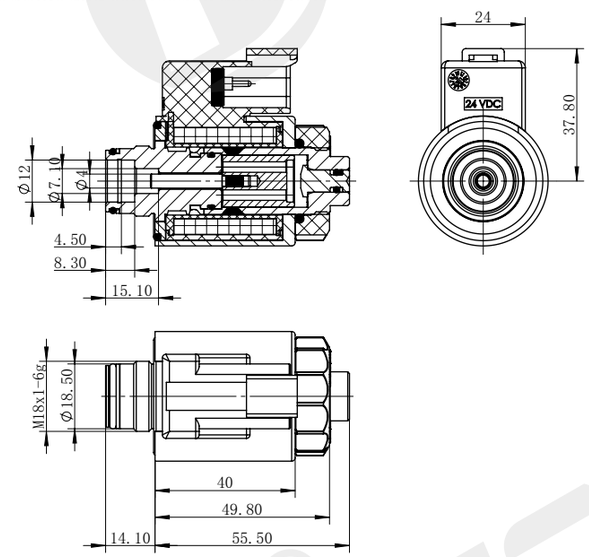

技术参数 /technical parameter		
环境温度 Ambient temperature	°C	-25~50
电压波动范围 Voltage fluctuation range	%	85~110
额定功率 Rated power	W	20
额定行程 Rated stroke	mm	2.5
全行程 Full stroke	mm	⩾ 3.6
工作油压 Working oil pressure	Mpa	⩽ 35
防护等级 Degree of protection		IP67
操作频率 Operating frequency	T/h	12000
通电持续率 Power on duration	%	100
绝缘等级 Insulation class		H(180)
电气连接方式 Electrical connection mode		C

力 - 位移特性曲线
F-S characteristic curve

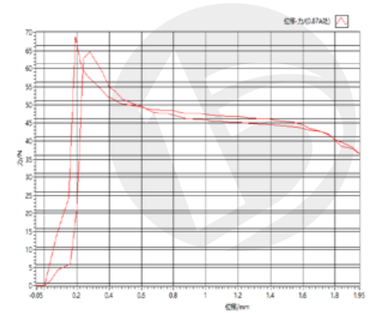

注意事项
matters needing attention

1. 线圈不得单独通电使用，有烧损风险！
2. 非防爆线圈，不得使用在有爆炸危险的介质中！
3. 线圈安装后，必须接地可靠，否则有触电危险！

1. The coil shall not be powered on alone, which has the risk of burning!
2. Non explosion-proof coil shall not be used in medium with explosion risk!
3. After the coil is installed, it must be grounded reliably, otherwise there is a risk of electric shock！

样本数据来源于试验室环境，仅供参考，贵公司如需最新数据或有特殊需求，欢迎联系搏业液压工程师。
The sample data comes from the laboratory environment and is only for reference. If your company needs the latest data or has special needs, please contact Boye hydraulic engineer.

BYM12-40R-01G

螺纹插装阀用电磁铁

Solenoid for threaded cartridge valve

DC 12V
DC 24V

其它规格可定做
Other can be customized

- 适用于 SVK-40 系列电液螺纹插装阀
- 螺纹连接，线圈可实现免停机更换
- 配备手动调整装置
- 线圈内孔 ϕ19，全塑封工艺

- Applicable to SVK-40 Series of electro-hydraulic threaded cartridge valves
- Threaded connection, coil can be replaced without stopping
- Equipped with manual adjustment device
- Coil inner hole ϕ 19. All-plastic sealing process

外形及连接尺寸

Outline and connection dimensions

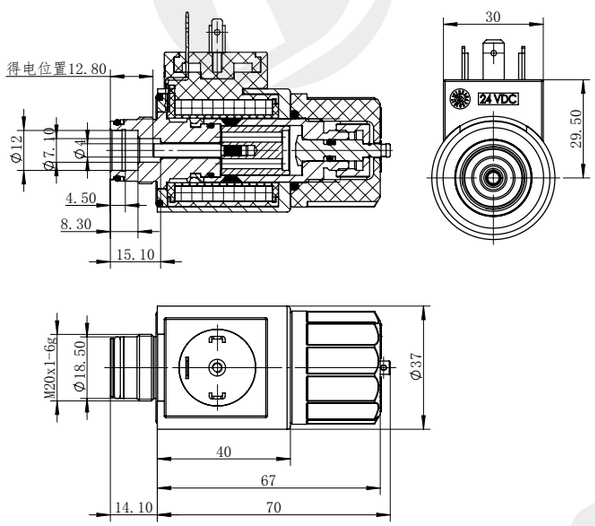

技术参数 /technical parameter		
环境温度 Ambient temperature	℃	-25~50
电压波动范围 Voltage fluctuation range	%	85~110
额定功率 Rated power	W	20
额定行程 Rated stroke	mm	2.5
全行程 Full stroke	mm	⩾ 3.6
工作油压 Working oil pressure	Mpa	⩽ 35
防护等级 Degree of protection		IP65
操作频率 Operating frequency	T/h	12000
通电持续率 Power on duration	%	100
绝缘等级 Insulation class		H(180)
电气连接方式 Electrical connection mode		DIN43650

力 - 位移特性曲线

F-S characteristic curve

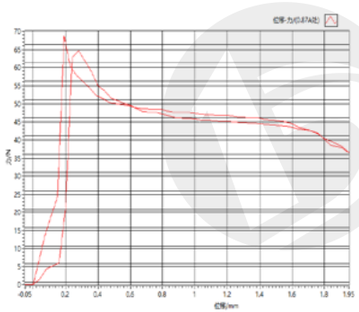

注意事项

matters needing attention

1. 线圈不得单独通电使用，有烧损风险！
2. 非防爆线圈，不得使用在有爆炸危险的介质中！
3. 线圈安装后，必须接地可靠，否则有触电危险！

1. The coil shall not be powered on alone, which has the risk of burning!
2. Non explosion-proof coil shall not be used in medium with explosion risk!
3. After the coil is installed, it must be grounded reliably, otherwise there is a risk of electric shock！

样本数据来源于试验室环境，仅供参考，贵公司如需最新数据或有特殊需求，欢迎联系搏业液压工程师。
The sample data comes from the laboratory environment and is only for reference. If your company needs the latest data or has special needs, please contact Boye hydraulic engineer.

BYM12-40R-01D

螺纹插装阀用电磁铁

Solenoid for threaded cartridge valve

DC 12V
DC 24V

其它规格可定做
Other can be customized

- 适用于 SVK-40 系列电液螺纹插装阀
- 螺纹连接，线圈可实现免停机更换
- 配备手动调整装置
- 线圈内孔 ϕ19，全塑封工艺

- Applicable to SVK-40 Series of electro-hydraulic threaded cartridge valves
- Threaded connection, coil can be replaced without stopping
- Equipped with manual adjustment device
- Coil inner hole ϕ 19. All-plastic sealing process

外形及连接尺寸

Outline and connection dimensions

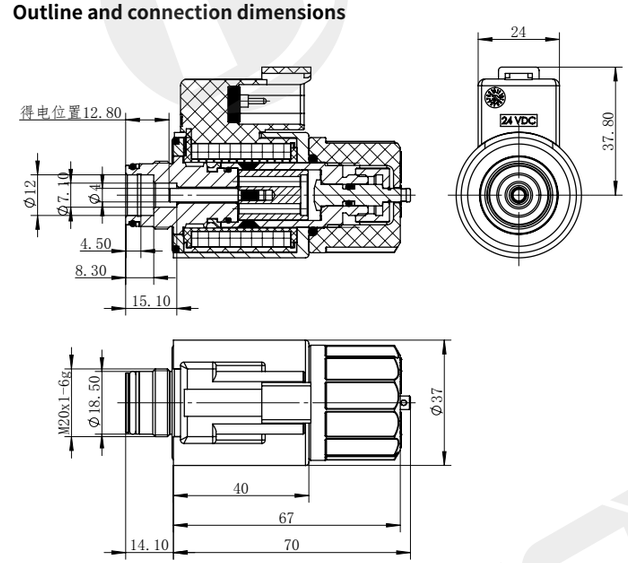

技术参数 /technical parameter		
环境温度 Ambient temperature	℃	-25~50
电压波动范围 Voltage fluctuation range	%	85~110
额定功率 Rated power	W	20
额定行程 Rated stroke	mm	2.5
全行程 Full stroke	mm	⩾ 3.6
工作油压 Working oil pressure	Mpa	⩽ 35
防护等级 Degree of protection		IP67
操作频率 Operating frequency	T/h	12000
通电持续率 Power on duration	%	100
绝缘等级 Insulation class		H(180)
电气连接方式 Electrical connection mode		DT04-2P

力 - 位移特性曲线

F-S characteristic curve

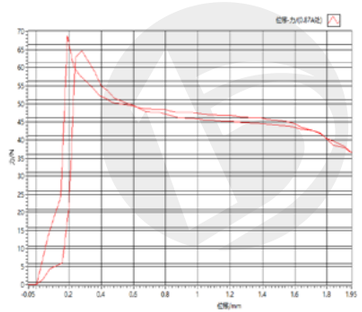

注意事项

matters needing attention

1. 线圈不得单独通电使用，有烧损风险！
2. 非防爆线圈，不得使用在有爆炸危险的介质中！
3. 线圈安装后，必须接地可靠，否则有触电危险！

1. The coil shall not be powered on alone, which has the risk of burning!
2. Non explosion-proof coil shall not be used in medium with explosion risk!
3. After the coil is installed, it must be grounded reliably, otherwise there is a risk of electric shock！

样本数据来源于试验室环境，仅供参考，贵公司如需最新数据或有特殊需求，欢迎联系搏业液压工程师。
The sample data comes from the laboratory environment and is only for reference. If your company needs the latest data or has special needs, please contact Boye hydraulic engineer.

BYM13-23-01G

螺纹插装阀用电磁铁
Solenoid for threaded cartridge valve

DC 12V
DC 24V

其它规格可定做
Other can be customized

- 适用于 SD3E-B2 系列常闭型电液螺纹插装阀
- 螺纹连接，线圈可实现免停机更换
- 线圈内孔 ϕ23，全塑封工艺

- Applicable to SD3E-B2 Series Normally Closed Electro-Hydraulic Screw Plug-in Valve
- Threaded connection, coil can be replaced without stopping
- Coil inner hole ϕ 23. All-plastic sealing process

外形及连接尺寸
Outline and connection dimensions

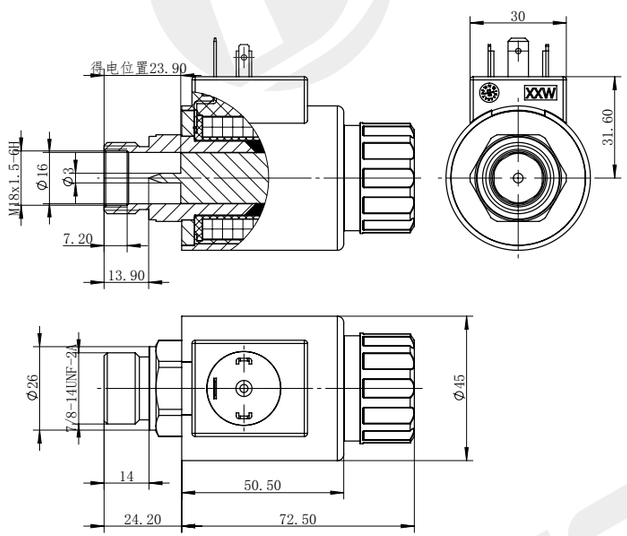

技术参数 /technical parameter		
环境温度 Ambient temperature	°C	-25~50
电压波动范围 Voltage fluctuation range	%	85~110
额定功率 Rated power	W	20
额定行程 Rated stroke	mm	2.5
全行程 Full stroke	mm	⩾ 3.6
工作油压 Working oil pressure	Mpa	⩽ 35
防护等级 Degree of protection		IP65
操作频率 Operating frequency	T/h	12000
通电持续率 Power on duration	%	100
绝缘等级 Insulation class		H(180)
电气连接方式 Electrical connection mode		DT04-2P

力 - 位移特性曲线
F-S characteristic curve

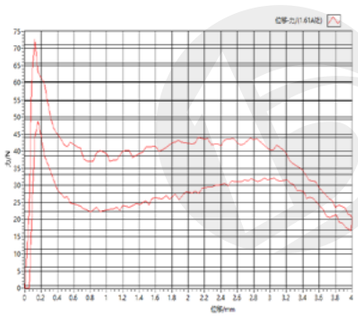

注意事项
matters needing attention

1. 线圈不得单独通电使用，有烧损风险！
2. 非防爆线圈，不得使用在有爆炸危险的介质中！
3. 线圈安装后，必须接地可靠，否则有触电危险！

1. The coil shall not be powered on alone, which has the risk of burning!
2. Non explosion-proof coil shall not be used in medium with explosion risk!
3. After the coil is installed, it must be grounded reliably, otherwise there is a risk of electric shock！

样本数据来源于试验室环境，仅供参考，贵公司如需最新数据或有特殊需求，欢迎联系搏业液压工程师。
The sample data comes from the laboratory environment and is only for reference. If your company needs the latest data or has special needs, please contact Boye hydraulic engineer.

BYM13-23-01D

螺纹插装阀用电磁铁
Solenoid for threaded cartridge valve

DC 12V
DC 24V

其它规格可定做
Other can be customized

- 适用于 SD3E-B2 系列常闭型电液螺纹插装阀
- 螺纹连接，线圈可实现免停机更换
- 线圈内孔 ϕ23，全塑封工艺

- Applicable to SD3E-B2 Series Normally Closed Electro-Hydraulic Screw Plug-in Valve
- Threaded connection, coil can be replaced without stopping
- Coil inner hole ϕ 23. All-plastic sealing process

外形及连接尺寸
Outline and connection dimensions

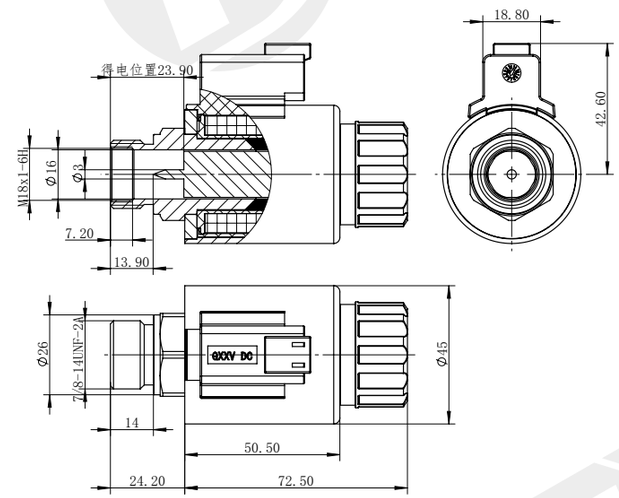

技术参数 /technical parameter		
环境温度 Ambient temperature	°C	-25~50
电压波动范围 Voltage fluctuation range	%	85~110
额定功率 Rated power	W	20
额定行程 Rated stroke	mm	2.5
全行程 Full stroke	mm	⩾ 3.6
工作油压 Working oil pressure	Mpa	⩽ 35
防护等级 Degree of protection		IP67
操作频率 Operating frequency	T/h	12000
通电持续率 Power on duration	%	100
绝缘等级 Insulation class		H(180)
电气连接方式 Electrical connection mode		DT04-2P

力 - 位移特性曲线
F-S characteristic curve

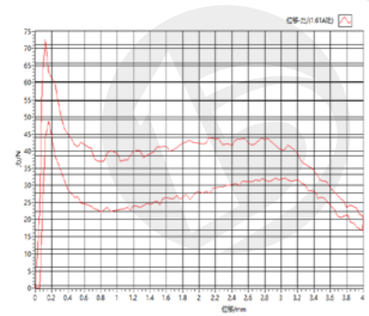

注意事项
matters needing attention

1. 线圈不得单独通电使用，有烧损风险！
2. 非防爆线圈，不得使用在有爆炸危险的介质中！
3. 线圈安装后，必须接地可靠，否则有触电危险！

1. The coil shall not be powered on alone, which has the risk of burning!
2. Non explosion-proof coil shall not be used in medium with explosion risk!
3. After the coil is installed, it must be grounded reliably, otherwise there is a risk of electric shock！

样本数据来源于试验室环境，仅供参考，贵公司如需最新数据或有特殊需求，欢迎联系搏业液压工程师。
The sample data comes from the laboratory environment and is only for reference. If your company needs the latest data or has special needs, please contact Boye hydraulic engineer.

BYM14-19-01RG

螺纹插装阀用电磁铁
Solenoid for threaded cartridge valve

DC 12V
DC 24V

其它规格可定做
Other can be customized

- 适用于 SD3E-B2 系列常开型电液螺纹插装阀
- 螺纹连接，线圈可实现免停机更换
- 配备手动调整装置
- 线圈内孔 ϕ19，全塑封工艺

- Applicable to SD3E-B2 series normally open electro-hydraulic threaded cartridge valve
- Threaded connection, coil can be replaced without stopping
- Equipped with manual adjustment device
- Coil inner hole ϕ 19. All-plastic sealing process

外形及连接尺寸
Outline and connection dimensions

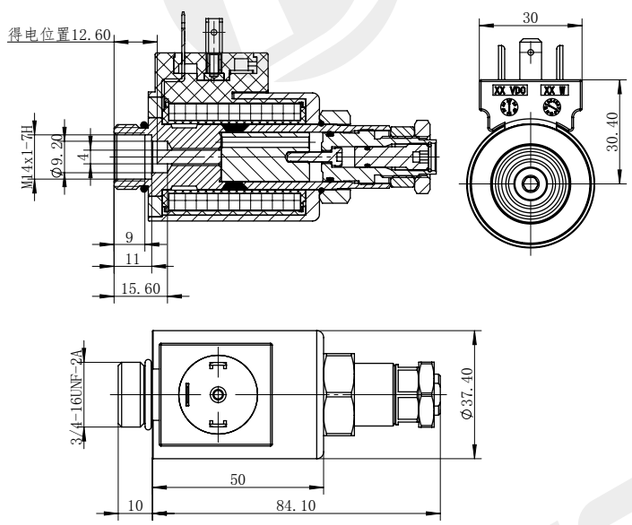

技术参数 /technical parameter		
环境温度 Ambient temperature	°C	-25~50
电压波动范围 Voltage fluctuation range	%	85~110
额定功率 Rated power	W	27
额定行程 Rated stroke	mm	1.6
全行程 Full stroke	mm	3.5
工作油压 Working oil pressure	Mpa	≤ 21
防护等级 Degree of protection		IP65
操作频率 Operating frequency	T/h	12000
通电持续率 Power on duration	%	100
绝缘等级 Insulation class		H(180)
电气连接方式 Electrical connection mode		DT04-2P

力 - 位移特性曲线
F-S characteristic curve

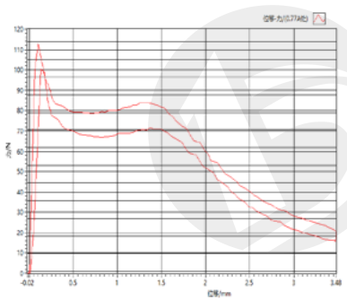

注意事项
matters needing attention

1. 线圈不得单独通电使用，有烧损风险！
2. 非防爆线圈，不得使用在有爆炸危险的介质中！
3. 线圈安装后，必须接地可靠，否则有触电危险！

1. The coil shall not be powered on alone, which has the risk of burning!
2. Non explosion-proof coil shall not be used in medium with explosion risk!
3. After the coil is installed, it must be grounded reliably, otherwise there is a risk of electric shock！

样本数据来源于试验室环境，仅供参考，贵公司如需最新数据或有特殊需求，欢迎联系搏业液压工程师。
The sample data comes from the laboratory environment and is only for reference. If your company needs the latest data or has special needs, please contact Boye hydraulic engineer.

BYM14-19-01RD

螺纹插装阀用电磁铁
Solenoid for threaded cartridge valve

DC 12V
DC 24V

其它规格可定做
Other can be customized

- 适用于 SD3E-B2 系列常开型电液螺纹插装阀
- 螺纹连接，线圈可实现免停机更换
- 配备手动调整装置
- 线圈内孔 ϕ19，全塑封工艺

- Applicable to SD3E-B2 series normally open electro-hydraulic threaded cartridge valve
- Threaded connection, coil can be replaced without stopping
- Equipped with manual adjustment device
- Coil inner hole ϕ 19. All-plastic sealing process

外形及连接尺寸
Outline and connection dimensions

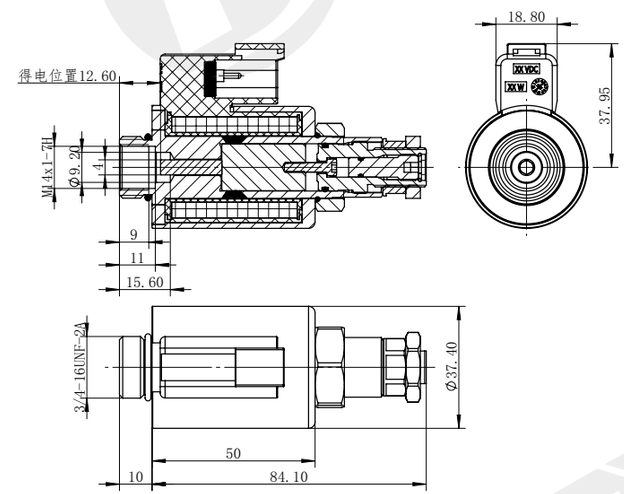

技术参数 /technical parameter		
环境温度 Ambient temperature	°C	-25~50
电压波动范围 Voltage fluctuation range	%	85~110
额定功率 Rated power	W	27
额定行程 Rated stroke	mm	1.6
全行程 Full stroke	mm	3.5
工作油压 Working oil pressure	Mpa	≤ 21
防护等级 Degree of protection		IP67
操作频率 Operating frequency	T/h	12000
通电持续率 Power on duration	%	100
绝缘等级 Insulation class		H(180)
电气连接方式 Electrical connection mode		DT04-2P

力 - 位移特性曲线
F-S characteristic curve

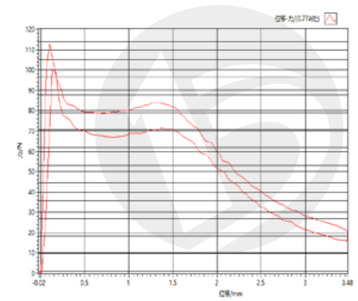

注意事项
matters needing attention

1. 线圈不得单独通电使用，有烧损风险！
2. 非防爆线圈，不得使用在有爆炸危险的介质中！
3. 线圈安装后，必须接地可靠，否则有触电危险！

1. The coil shall not be powered on alone, which has the risk of burning!
2. Non explosion-proof coil shall not be used in medium with explosion risk!
3. After the coil is installed, it must be grounded reliably, otherwise there is a risk of electric shock！

样本数据来源于试验室环境，仅供参考，贵公司如需最新数据或有特殊需求，欢迎联系搏业液压工程师。
The sample data comes from the laboratory environment and is only for reference. If your company needs the latest data or has special needs, please contact Boye hydraulic engineer.

BYM14-19-01RJ

螺纹插装阀用电磁铁

Solenoid for threaded cartridge valve

DC 12V
DC 24V

其它规格可定做
Other can be customized

- 适用于 SD3E-B2 系列常开型电液螺纹插装阀
- 螺纹连接，线圈可实现免停机更换
- 配备手动调整装置
- 线圈内孔 ϕ19，全塑封工艺

- Applicable to SD3E-B2 series normally open electro-hydraulic threaded cartridge valve
- Threaded connection, coil can be replaced without stopping
- Equipped with manual adjustment device
- Coil inner hole ϕ 19. All-plastic sealing process

外形及连接尺寸

Outline and connection dimensions

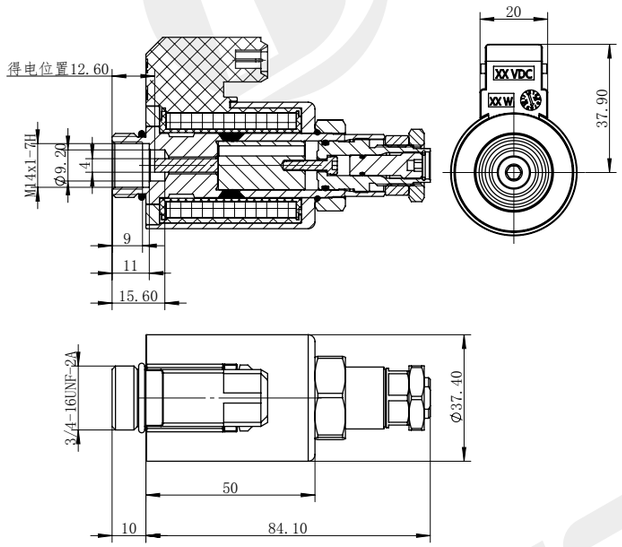

技术参数 /technical parameter		
环境温度 Ambient temperature	°C	-25~50
电压波动范围 Voltage fluctuation range	%	85~110
额定功率 Rated power	W	27
额定行程 Rated stroke	mm	1.6
全行程 Full stroke	mm	3.5
工作油压 Working oil pressure	Mpa	≤ 21
防护等级 Degree of protection		IP67
操作频率 Operating frequency	T/h	12000
通电持续率 Power on duration	%	100
绝缘等级 Insulation class		H(180)
电气连接方式 Electrical connection mode		AMP-SS

力 - 位移特性曲线

F-S characteristic curve

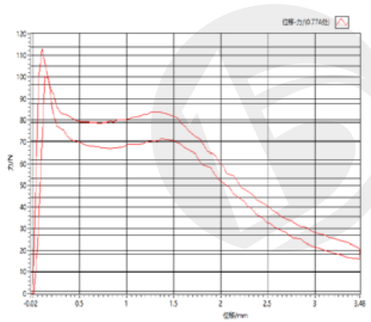

注意事项

matters needing attention

1. 线圈不得单独通电使用，有烧损风险！
2. 非防爆线圈，不得使用在有爆炸危险的介质中！
3. 线圈安装后，必须接地可靠，否则有触电危险！

1. The coil shall not be powered on alone, which has the risk of burning!
2. Non explosion-proof coil shall not be used in medium with explosion risk!
3. After the coil is installed, it must be grounded reliably, otherwise there is a risk of electric shock！

样本数据来源于试验室环境，仅供参考，贵公司如需最新数据或有特殊需求，欢迎联系搏业液压工程师。
The sample data comes from the laboratory environment and is only for reference. If your company needs the latest data or has special needs, please contact Boye hydraulic engineer.

BYC 插装阀用线圈

COIL FOR CARTRIDGE VALVE

- 搏业液压，BYC 插装阀用线圈，属于电磁插装阀关键电磁驱动元件，广泛应用于工业、工程、农业、冶金、船舶、军工机械等领域，
- 产品设计符合 JBT5244/VDE0580 标准。
- 采用优质导磁材料，保证电磁铁输出力稳定可靠。
- 提供多种标准连接方式，外壳防护等级 IP65-IP69K，可满足不同领域环境需要。
- 采用高质量 H 级漆包线和绝缘材料，全塑封线圈结构，坚固耐用，散热快，即使长期使用也不会烧损。
- 表面处理：蓝白锌 / 锌镍合金。
- 标准线圈若不能满足您的需求，欢迎联系搏业液压，可根据您的需求定制，欢迎咨询。

- Boye hydraulic, coil for BYC series cartridge valve, belongs to the key electromagnetic driving element of electromagnetic cartridge valve, which is widely used in industry, engineering, agriculture, metallurgy, shipbuilding, military machinery and other fields,
- The product design conforms to JBT5244 / VDE0580 standard.
- High quality magnetic conductive materials are adopted to ensure the stable and reliable output force of electromagnet.
- A variety of standard connection modes are provided, and the enclosure protection grade is IP65-IP69K, which can meet the environmental needs of different fields.
- It adopts high-quality H-class enamelled wire and insulating material, and fully plastic sealed coil structure, which is firm and durable, fast heat dissipation, and will not burn even if it is used for a long time.
- Surface treatment: blue white zinc/zinc-nickel alloy.
- If the standard coil can not meet your needs, please contact Boye hydraulic, which can be customized according to your needs. Welcome to consult.

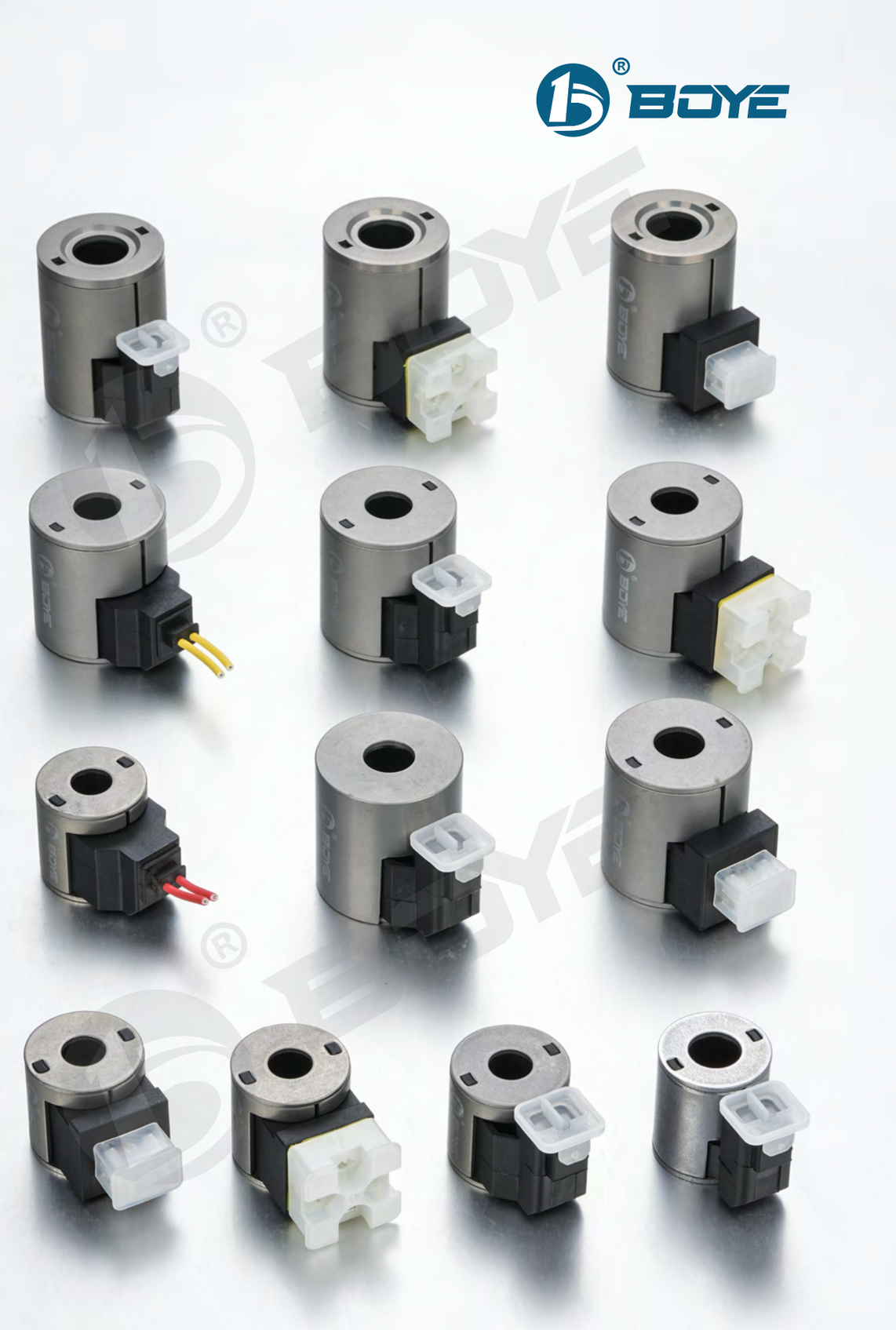

插装阀用线圈

Coil for cartridge valve

BYC01-13-01D

DC 12V
DC 24V

其它规格可定做
Other can be customized

可定制比例型
Customizable proportions

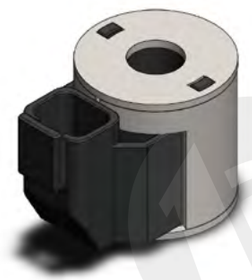

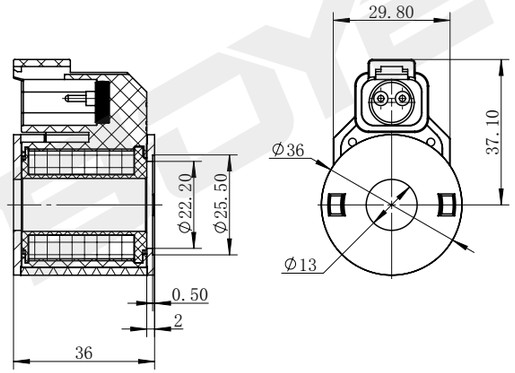

技术参数 /technical parameter					
环境温度 Ambienttemperature	°C	-25~50	防护等级 Degree of protection		IP67
电压波动范围 Voltage fluctuation range	%	85~110	通电持续率 Power on duration	%	100
额定功率 Rated power	W	16/20	绝缘等级 Insulation class		H（180）

BYC01-13-01L

DC 24V
AC 220V

其它规格可定做
Other can be customized

可定制比例型
Customizable proportions

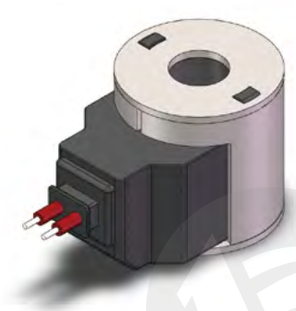

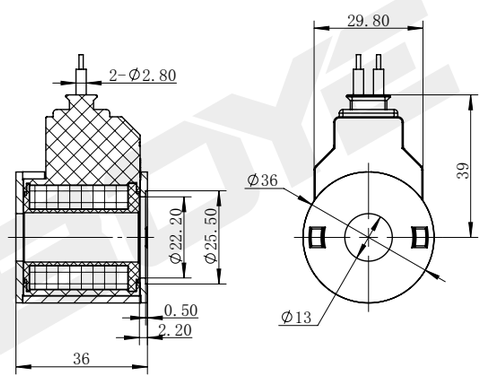

技术参数 /technical parameter					
环境温度 Ambienttemperature	°C	-25~50	防护等级 Degree of protection		IP67
电压波动范围 Voltage fluctuation range	%	85~110	通电持续率 Power on duration	%	100
额定功率 Rated power	W	16/20	绝缘等级 Insulation class		H（180）

样本数据来源于试验室环境，仅供参考，贵公司如需最新数据或有特殊需求，欢迎联系搏业液压工程师。
The sample data comes from the laboratory environment and is only for reference. If your company needs the latest data or has special needs, please contact Boye hydraulic engineer.

插装阀用线圈

Coil for cartridge valve

BYC01-13-01G

DC 24V
AC 220V

其它规格可定做
Other can be customized

可定制比例型
Customizable proportions

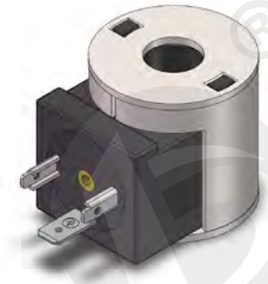

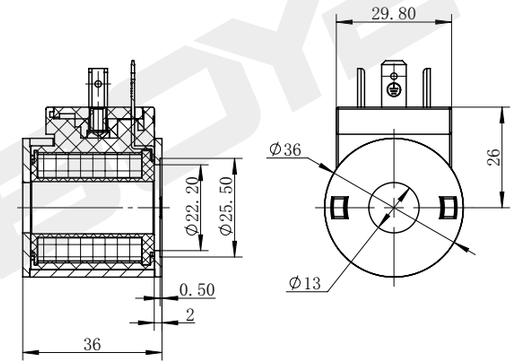

技术参数 /technical parameter					
环境温度 Ambienttemperature	°C	-25~50	防护等级 Degree of protection		IP65
电压波动范围 Voltage fluctuation range	%	85~110	通电持续率 Power on duration	%	100
额定功率 Rated power	W	16/20	绝缘等级 Insulation class		H（180）

BYC01-13-01S

DC 24V
AC 220V

其它规格可定做
Other can be customized

可定制比例型
Customizable proportions

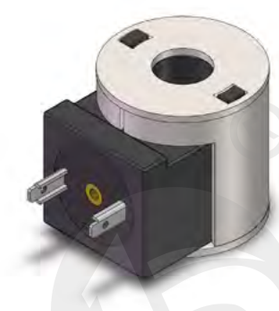

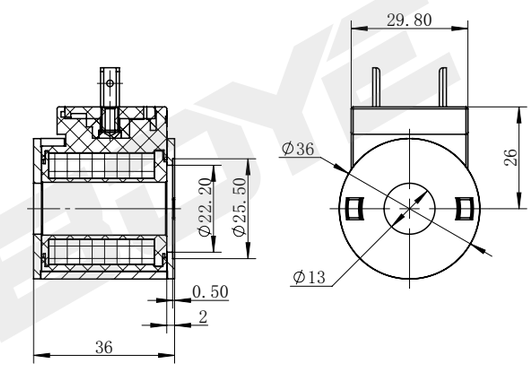

技术参数 /technical parameter					
环境温度 Ambienttemperature	°C	-25~50	防护等级 Degree of protection		IP65
电压波动范围 Voltage fluctuation range	%	85~110	通电持续率 Power on duration	%	100
额定功率 Rated power	W	16/20	绝缘等级 Insulation class		H（180）

样本数据来源于试验室环境，仅供参考，贵公司如需最新数据或有特殊需求，欢迎联系搏业液压工程师。
The sample data comes from the laboratory environment and is only for reference. If your company needs the latest data or has special needs, please contact Boye hydraulic engineer.

TEL:0574-86587131 www.nbboye.net

插装阀用线圈
Coil for cartridge valve

DC 12V
DC 24V
其它规格可定做
Other can be customized

BYC01-13-02D

可定制比例型
Customizable proportions

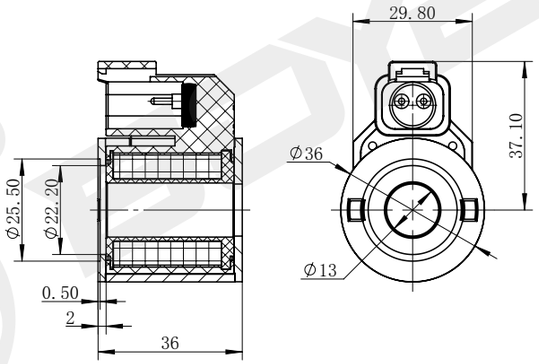

技术参数 /technical parameter					
环境温度 Ambienttemperature	°C	-25~50	防护等级 Degree of protection		IP67
电压波动范围 Voltage fluctuation range	%	85~110	通电持续率 Power on duration	%	100
额定功率 Rated power	W	16/20	绝缘等级 Insulation class		H（180）

DC 12V
DC 24V
其它规格可定做
Other can be customized

BYC01-13-03D

可定制比例型
Customizable proportions

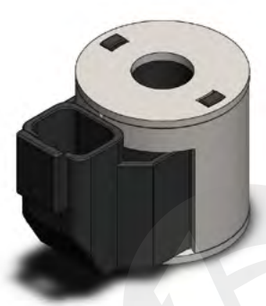

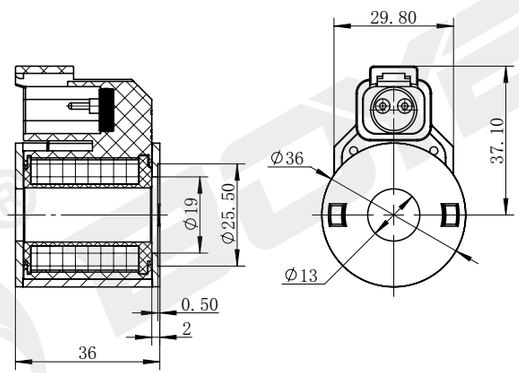

技术参数 /technical parameter					
环境温度 Ambienttemperature	°C	-25~50	防护等级 Degree of protection		IP67
电压波动范围 Voltage fluctuation range	%	85~110	通电持续率 Power on duration	%	100
额定功率 Rated power	W	16/20	绝缘等级 Insulation class		H（180）

样本数据来源于试验室环境，仅供参考，贵公司如需最新数据或有特殊需求，欢迎联系搏业液压工程师。
The sample data comes from the laboratory environment and is only for reference. If your company needs the latest data or has special needs, please contact Boye hydraulic engineer.

插装阀用线圈
Coil for cartridge valve

DC 12V
DC 24V
其它规格可定做
Other can be customized

BYC01-15-01D

比例型
proportional type

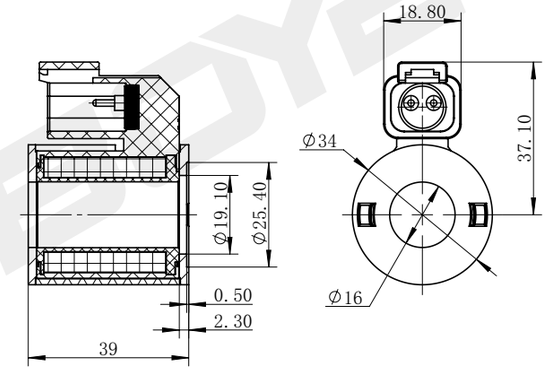

技术参数 /technical parameter					
环境温度 Ambienttemperature	°C	-25~50	防护等级 Degree of protection		IP67
电压波动范围 Voltage fluctuation range	%	85~110	通电持续率 Power on duration	%	100
额定功率 Rated power	W	26	绝缘等级 Insulation class		H（180）

DC 12V
DC 24V
其它规格可定做
Other can be customized

BYC01-16-01D

可定制比例型
Customizable proportions

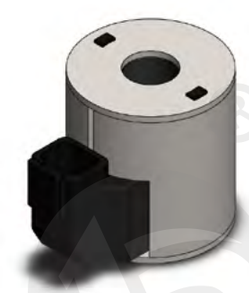

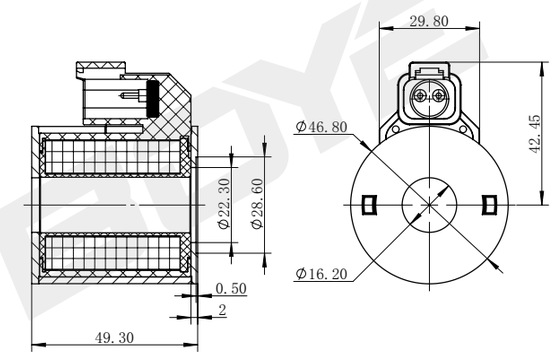

技术参数 /technical parameter					
环境温度 Ambienttemperature	°C	-25~50	防护等级 Degree of protection		IP67
电压波动范围 Voltage fluctuation range	%	85~110	通电持续率 Power on duration	%	100
额定功率 Rated power	W	20/28	绝缘等级 Insulation class		H（180）

样本数据来源于试验室环境，仅供参考，贵公司如需最新数据或有特殊需求，欢迎联系搏业液压工程师。
The sample data comes from the laboratory environment and is only for reference. If your company needs the latest data or has special needs, please contact Boye hydraulic engineer.

TEL:0574-86587113 www.nbboye.net

插装阀用线圈

Coil for cartridge valve

DC 24V
AC 220V
其它规格可定做
Other can be customized

BYC01-16-01L

可定制比例型
Customizable proportions

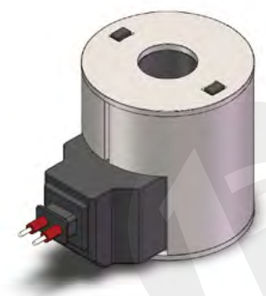

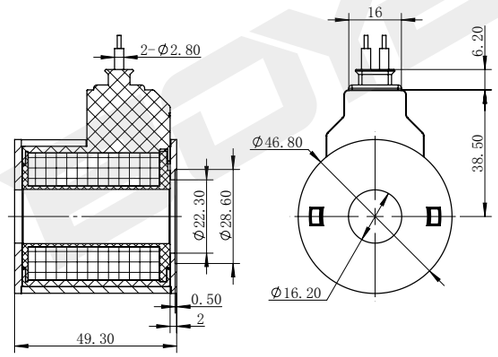

技术参数 /technical parameter					
环境温度 Ambienttemperature	°C	-25~50	防护等级 Degree of protection		IP67
电压波动范围 Voltage fluctuation range	%	85~110	通电持续率 Power on duration	%	100
额定功率 Rated power	W	20/28	绝缘等级 Insulation class		H（180）

DC 24V
AC 220V
其它规格可定做
Other can be customized

BYC01-16-01G

可定制比例型
Customizable proportions

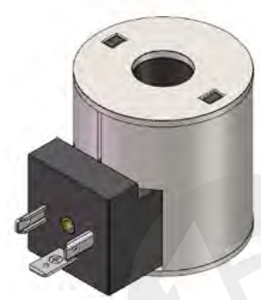

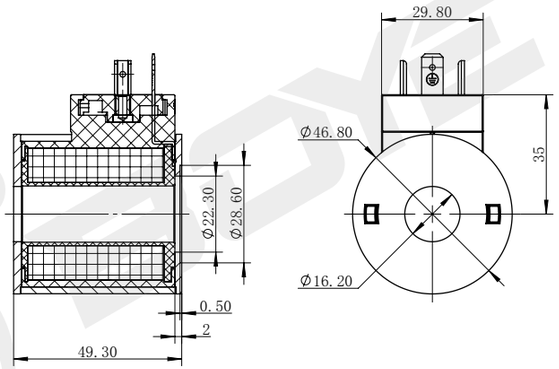

技术参数 /technical parameter					
环境温度 Ambienttemperature	°C	-25~50	防护等级 Degree of protection		IP65
电压波动范围 Voltage fluctuation range	%	85~110	通电持续率 Power on duration	%	100
额定功率 Rated power	W	20/28	绝缘等级 Insulation class		H（180）

样本数据来源于试验室环境，仅供参考，贵公司如需最新数据或有特殊需求，欢迎联系搏业液压工程师。
The sample data comes from the laboratory environment and is only for reference. If your company needs the latest data or has special needs, please contact Boye hydraulic engineer.

插装阀用线圈

Coil for cartridge valve

DC 24V
AC 220V
其它规格可定做
Other can be customized

BYC01-16-01S

可定制比例型
Customizable proportions

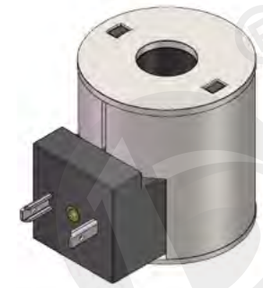

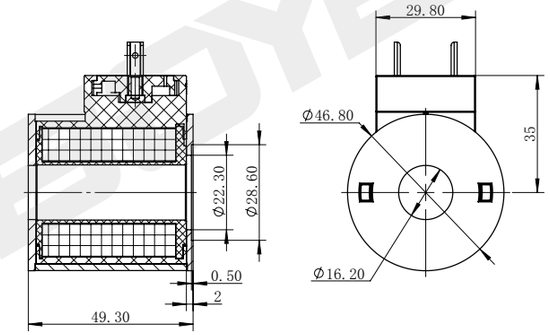

技术参数 /technical parameter					
环境温度 Ambienttemperature	°C	-25~50	防护等级 Degree of protection		IP65
电压波动范围 Voltage fluctuation range	%	85~110	通电持续率 Power on duration	%	100
额定功率 Rated power	W	20/28	绝缘等级 Insulation class		H（180）

DC 12V
DC 24V
其它规格可定做
Other can be customized

BYC01-21-01D

比例型
proportional type

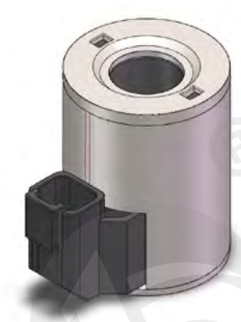

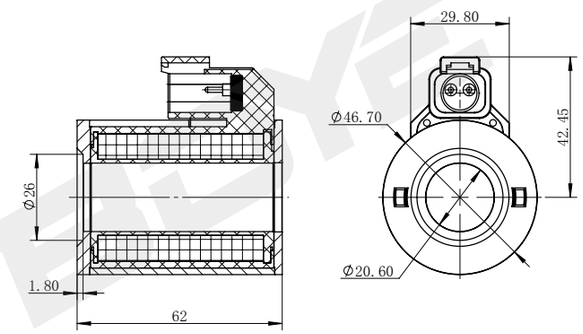

技术参数 /technical parameter					
环境温度 Ambienttemperature	°C	-25~50	防护等级 Degree of protection		IP67
电压波动范围 Voltage fluctuation range	%	85~110	通电持续率 Power on duration	%	100
额定功率 Rated power	W	32	绝缘等级 Insulation class		H（180）

样本数据来源于试验室环境，仅供参考，贵公司如需最新数据或有特殊需求，欢迎联系搏业液压工程师。
The sample data comes from the laboratory environment and is only for reference. If your company needs the latest data or has special needs, please contact Boye hydraulic engineer.

插装阀用线圈

Coil for cartridge valve

BYC01-21-01G

比例型
proportional type

DC 12V
DC 24V
其它规格可定做
Other can be customized

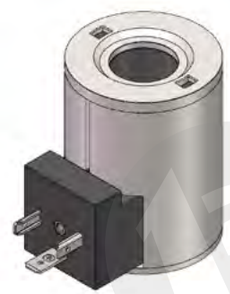

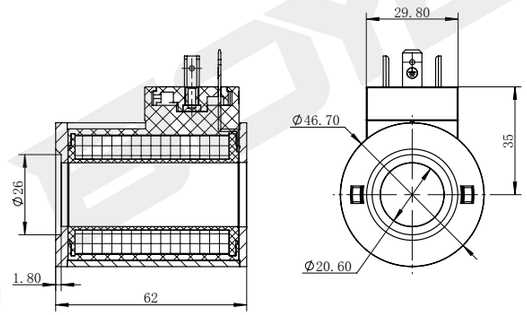

技术参数 /technical parameter					
环境温度 Ambienttemperature	°C	-25~50	防护等级 Degree of protection		IP65
电压波动范围 Voltage fluctuation range	%	85~110	通电持续率 Power on duration	%	100
额定功率 Rated power	W	32	绝缘等级 Insulation class		H（180）

BYC01-21-01S

比例型
proportional type

DC 12V
DC 24V
其它规格可定做
Other can be customized

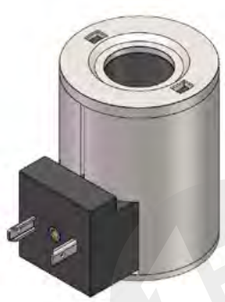

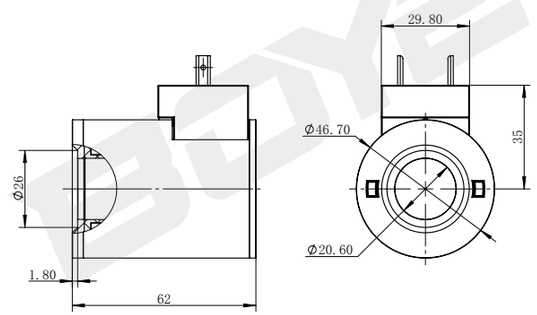

技术参数 /technical parameter					
环境温度 Ambienttemperature	°C	-25~50	防护等级 Degree of protection		IP65
电压波动范围 Voltage fluctuation range	%	85~110	通电持续率 Power on duration	%	100
额定功率 Rated power	W	32	绝缘等级 Insulation class		H（180）

样本数据来源于试验室环境，仅供参考，贵公司如需最新数据或有特殊需求，欢迎联系搏业液压工程师。
The sample data comes from the laboratory environment and is only for reference. If your company needs the latest data or has special needs, please contact Boye hydraulic engineer.

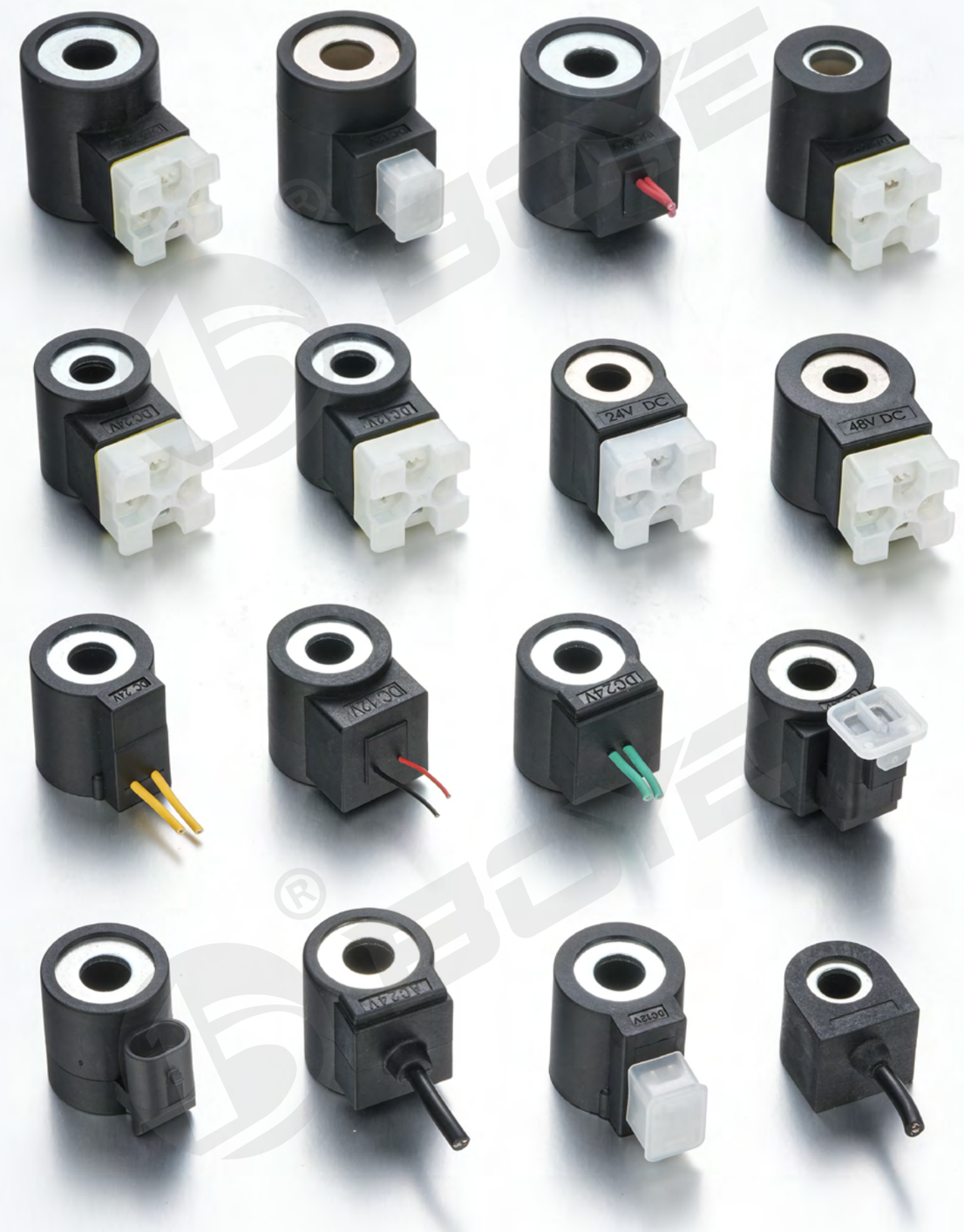

插装阀用线圈
Coil for cartridge valve

DC 24V
AC 220V
其它规格可定做
Other can be customized

BYC02-11-01H

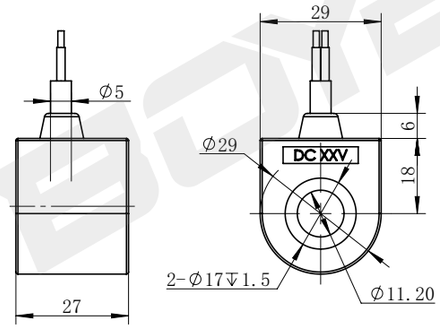

技术参数 /technical parameter					
环境温度 Ambienttemperature	°C	-25~50	防护等级 Degree of protection		IP67
电压波动范围 Voltage fluctuation range	%	85~110	通电持续率 Power on duration	%	100
额定功率 Rated power	W	20	绝缘等级 Insulation class		H（180）

插装阀用线圈
Coil for cartridge valve

DC 24V
AC 220V
其它规格可定做
Other can be customized

BYC02-13-01L

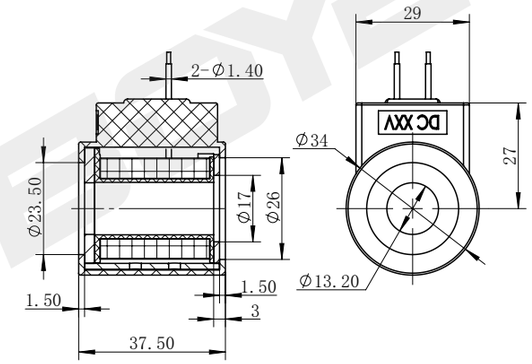

技术参数 /technical parameter					
环境温度 Ambienttemperature	°C	-25~50	防护等级 Degree of protection		IP67
电压波动范围 Voltage fluctuation range	%	85~110	通电持续率 Power on duration	%	100
额定功率 Rated power	W	15/20	绝缘等级 Insulation class		H（180）

DC 24V
AC 220V
其它规格可定做
Other can be customized

BYC02-13-01G

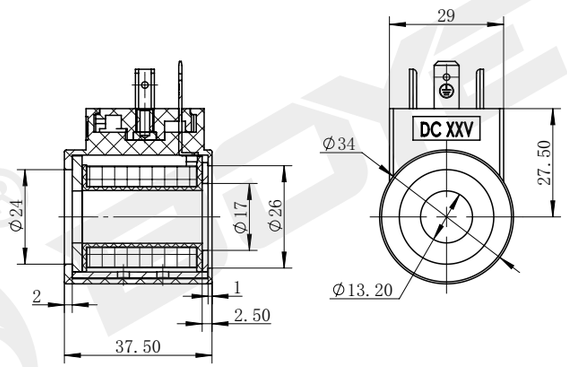

技术参数 /technical parameter					
环境温度 Ambienttemperature	°C	-25~50	防护等级 Degree of protection		IP65
电压波动范围 Voltage fluctuation range	%	85~110	通电持续率 Power on duration	%	100
额定功率 Rated power	W	15/20	绝缘等级 Insulation class		H（180）

DC 12V
DC 24V
其它规格可定做
Other can be customized

BYC02-13-01D

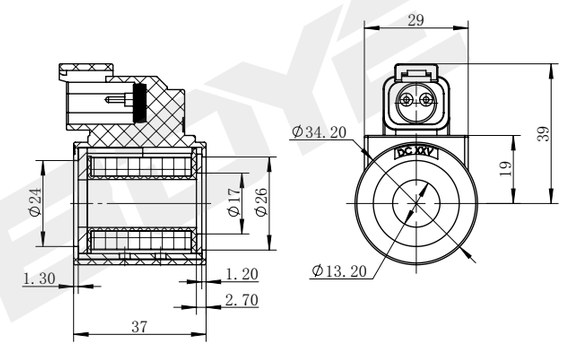

技术参数 /technical parameter					
环境温度 Ambienttemperature	°C	-25~50	防护等级 Degree of protection		IP67
电压波动范围 Voltage fluctuation range	%	85~110	通电持续率 Power on duration	%	100
额定功率 Rated power	W	15/20	绝缘等级 Insulation class		H（180）

样本数据来源于试验室环境，仅供参考，贵公司如需最新数据或有特殊需求，欢迎联系搏业液压工程师。
The sample data comes from the laboratory environment and is only for reference. If your company needs the latest data or has special needs, please contact Boye hydraulic engineer.

插装阀用线圈

Coil for cartridge valve

BYC02-13-02L

DC 24V
AC 220V
其它规格可定做
Other can be customized

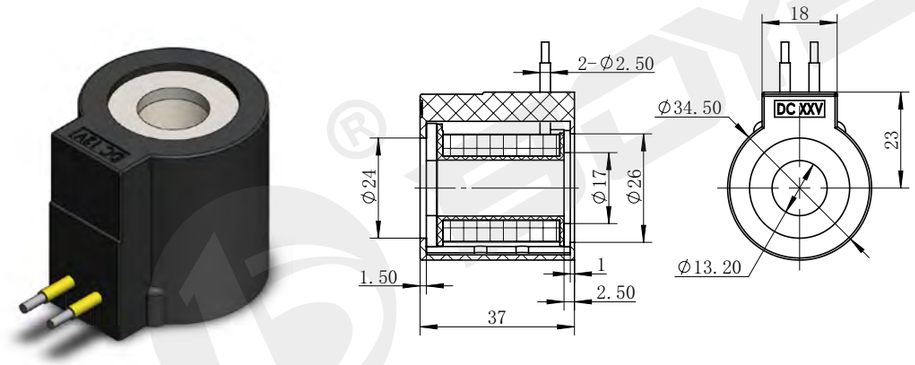

技术参数 /technical parameter					
环境温度 Ambienttemperature	°C	-25~50	防护等级 Degree of protection		IP67
电压波动范围 Voltage fluctuation range	%	85~110	通电持续率 Power on duration	%	100
额定功率 Rated power	W	15/20	绝缘等级 Insulation class		H（180）

BYC02-13-02L1

DC 24V
AC 220V
其它规格可定做
Other can be customized

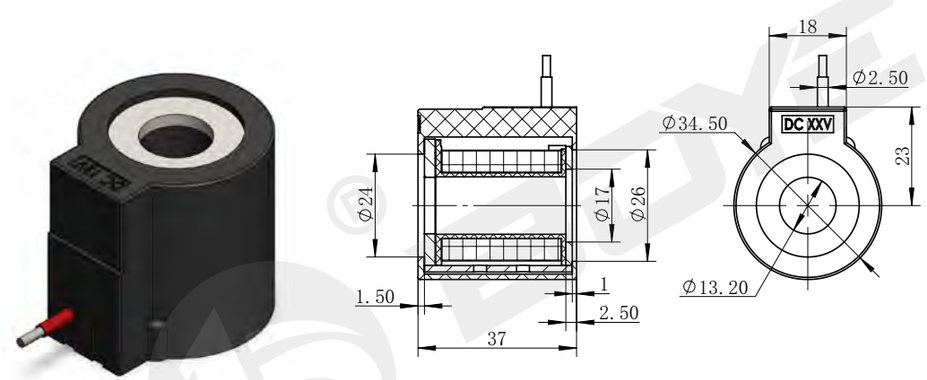

技术参数 /technical parameter					
环境温度 Ambienttemperature	°C	-25~50	防护等级 Degree of protection		IP67
电压波动范围 Voltage fluctuation range	%	85~110	通电持续率 Power on duration	%	100
额定功率 Rated power	W	15/20	绝缘等级 Insulation class		H（180）

样本数据来源于试验室环境，仅供参考，贵公司如需最新数据或有特殊需求，欢迎联系搏业液压工程师。
The sample data comes from the laboratory environment and is only for reference. If your company needs the latest data or has special needs, please contact Boye hydraulic engineer.

插装阀用线圈

Coil for cartridge valve

BYC02-13-02S

DC 24V
AC 220V
其它规格可定做
Other can be customized

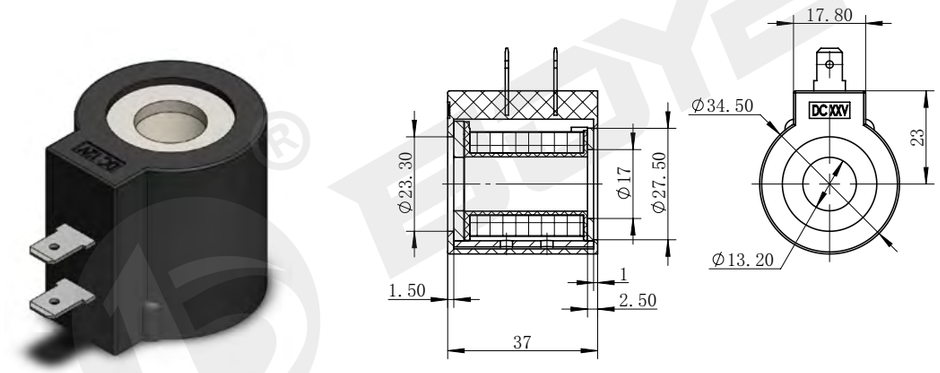

技术参数 /technical parameter					
环境温度 Ambienttemperature	°C	-25~50	防护等级 Degree of protection		IP65
电压波动范围 Voltage fluctuation range	%	85~110	通电持续率 Power on duration	%	100
额定功率 Rated power	W	15/20	绝缘等级 Insulation class		H（180）

BYC02-13-03L

DC 24V
AC 220V
其它规格可定做
Other can be customized

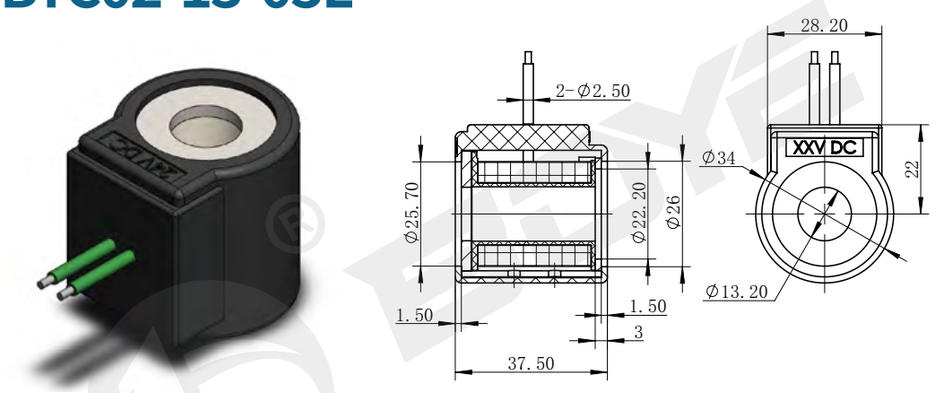

技术参数 /technical parameter					
环境温度 Ambienttemperature	°C	-25~50	防护等级 Degree of protection		IP67
电压波动范围 Voltage fluctuation range	%	85~110	通电持续率 Power on duration	%	100
额定功率 Rated power	W	15/20	绝缘等级 Insulation class		H（180）

样本数据来源于试验室环境，仅供参考，贵公司如需最新数据或有特殊需求，欢迎联系搏业液压工程师。
The sample data comes from the laboratory environment and is only for reference. If your company needs the latest data or has special needs, please contact Boye hydraulic engineer.

TEL:0574-86587131 www.nbboye.net

插装阀用线圈

Coil for cartridge valve

BYC02-13-04D

DC 12V
DC 24V
其它规格可定做
Other can be customized

可定制比例型
Customizable proportions

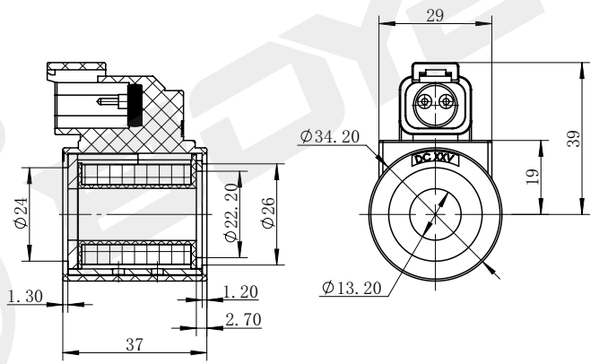

技术参数 /technical parameter					
环境温度 Ambienttemperature	°C	-25~50	防护等级 Degree of protection		IP67
电压波动范围 Voltage fluctuation range	%	85~110	通电持续率 Power on duration	%	100
额定功率 Rated power	W	15/20	绝缘等级 Insulation class		H（180）

BYC02-13-04G

DC 24V
AC 220V
其它规格可定做
Other can be customized

可定制比例型
Customizable proportions

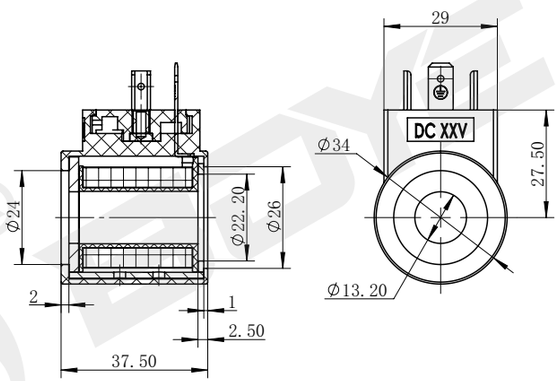

技术参数 /technical parameter					
环境温度 Ambienttemperature	°C	-25~50	防护等级 Degree of protection		IP65
电压波动范围 Voltage fluctuation range	%	85~110	通电持续率 Power on duration	%	100
额定功率 Rated power	W	15/20	绝缘等级 Insulation class		H（180）

样本数据来源于试验室环境，仅供参考，贵公司如需最新数据或有特殊需求，欢迎联系搏业液压工程师。
The sample data comes from the laboratory environment and is only for reference. If your company needs the latest data or has special needs, please contact Boye hydraulic engineer.

插装阀用线圈

Coil for cartridge valve

BYC02-13-05H

DC 24V
AC 220V
其它规格可定做
Other can be customized

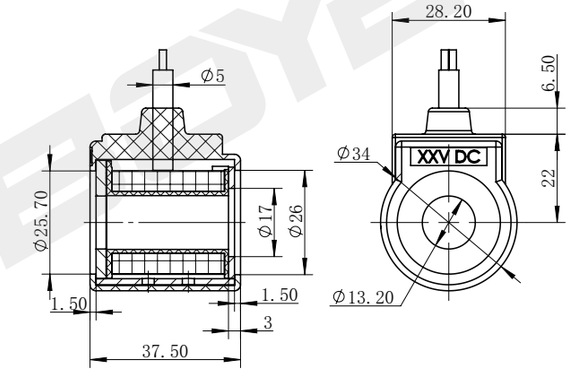

技术参数 /technical parameter					
环境温度 Ambienttemperature	°C	-25~50	防护等级 Degree of protection		IP67
电压波动范围 Voltage fluctuation range	%	85~110	通电持续率 Power on duration	%	100
额定功率 Rated power	W	15/20	绝缘等级 Insulation class		H（180）

BYC02-13-06M

DC 12V
DC 24V
其它规格可定做
Other can be customized

可定制比例型
Customizable proportions

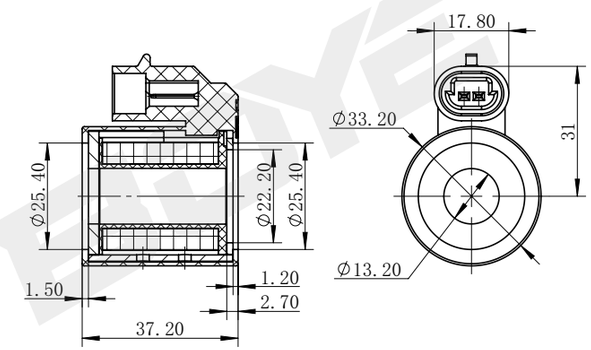

技术参数 /technical parameter					
环境温度 Ambienttemperature	°C	-25~50	防护等级 Degree of protection		IP67
电压波动范围 Voltage fluctuation range	%	85~110	通电持续率 Power on duration	%	100
额定功率 Rated power	W	15/20	绝缘等级 Insulation class		H（180）

样本数据来源于试验室环境，仅供参考，贵公司如需最新数据或有特殊需求，欢迎联系搏业液压工程师。
The sample data comes from the laboratory environment and is only for reference. If your company needs the latest data or has special needs, please contact Boye hydraulic engineer.

插装阀用线圈

Coil for cartridge valve

DC 24V
AC 220V
其它规格可定做
Other can be customized

BYC02-13-07L

可定制比例型
Customizable proportions

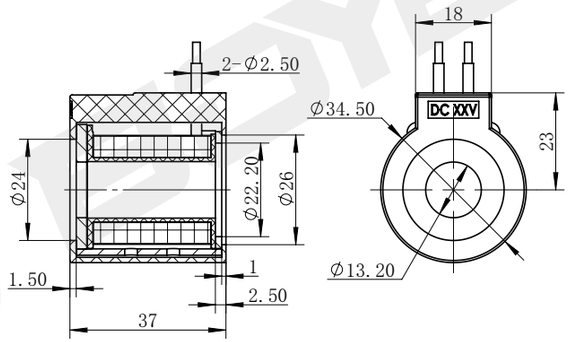

技术参数 /technical parameter					
环境温度 Ambienttemperature	°C	-25~50	防护等级 Degree of protection		IP67
电压波动范围 Voltage fluctuation range	%	85~110	通电持续率 Power on duration	%	100
额定功率 Rated power	W	15/20	绝缘等级 Insulation class		H（180）

插装阀用线圈

Coil for cartridge valve

DC 24V
AC 220V
其它规格可定做
Other can be customized

BYC02-13-07S

可定制比例型
Customizable proportions

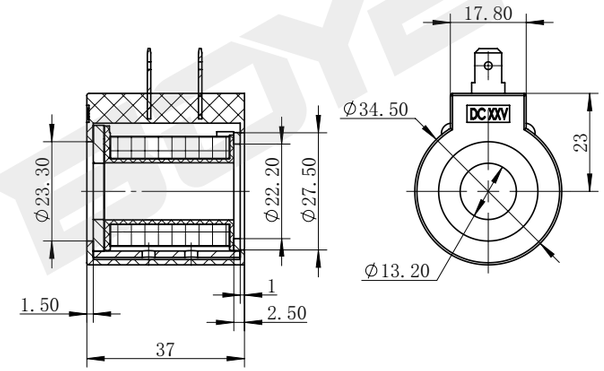

技术参数 /technical parameter					
环境温度 Ambienttemperature	°C	-25~50	防护等级 Degree of protection		IP65
电压波动范围 Voltage fluctuation range	%	85~110	通电持续率 Power on duration	%	100
额定功率 Rated power	W	15/20	绝缘等级 Insulation class		H（180）

插装阀用线圈

Coil for cartridge valve

DC 24V
AC 220V
其它规格可定做
Other can be customized

BYC02-13-07L1

可定制比例型
Customizable proportions

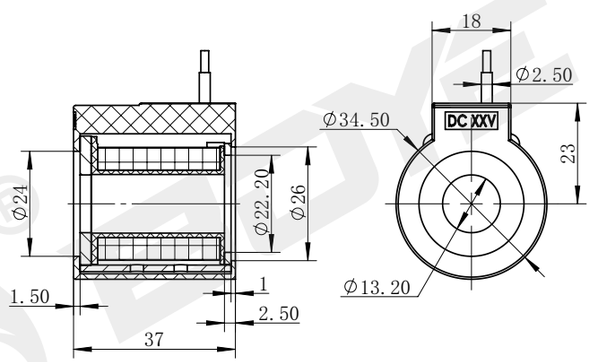

技术参数 /technical parameter					
环境温度 Ambienttemperature	°C	-25~50	防护等级 Degree of protection		IP67
电压波动范围 Voltage fluctuation range	%	85~110	通电持续率 Power on duration	%	100
额定功率 Rated power	W	15/20	绝缘等级 Insulation class		H（180）

BYC02-13A-01G

DC24V
AC220V
其它规格可定做
Other can be customized

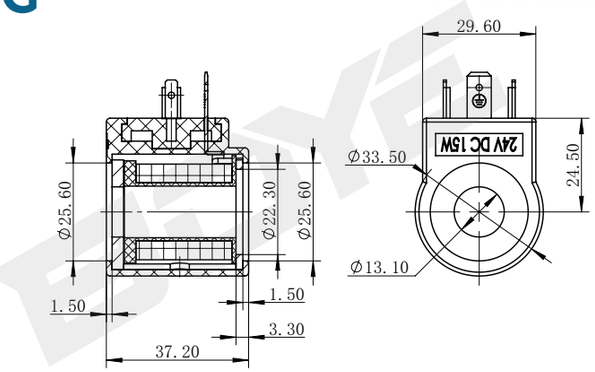

技术参数 /technical parameter					
环境温度 Ambienttemperature	°C	-25~50	防护等级 Degree of protection		IP65
电压波动范围 Voltage fluctuation range	%	85~110	通电持续率 Power on duration	%	100
额定功率 Rated power	W	15/20	绝缘等级 Insulation class		H（180）

样本数据来源于试验室环境，仅供参考，贵公司如需最新数据或有特殊需求，欢迎联系搏业液压工程师。
The sample data comes from the laboratory environment and is only for reference. If your company needs the latest data or has special needs, please contact Boye hydraulic engineer.

www.nbboye.net TEL:0574-86587131

插装阀用线圈

Coil for cartridge valve

BYC02-13B-01G

DC 24V
AC 220V
其它规格可定做
Other can be customized

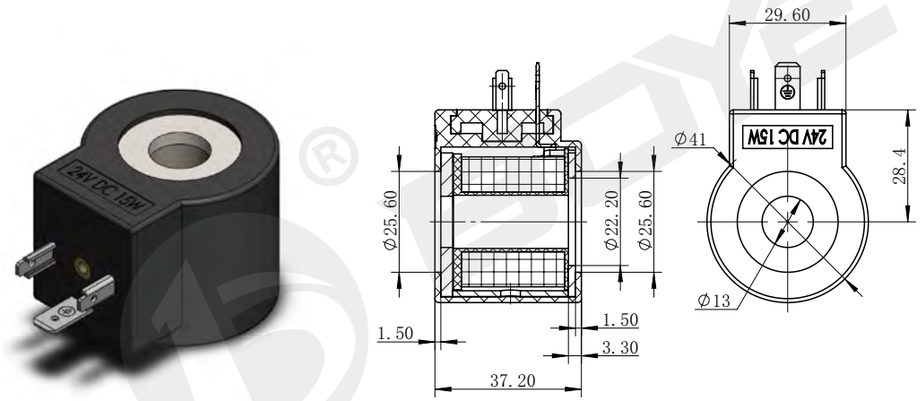

技术参数 /technical parameter					
环境温度 Ambienttemperature	°C	-25~50	防护等级 Degree of protection		IP65
电压波动范围 Voltage fluctuation range	%	85~110	通电持续率 Power on duration	%	100
额定功率 Rated power	W	18	绝缘等级 Insulation class		H（180）

BYC02-13C-01S

DC24V
AC220V
其它规格可定做
Other can be customized

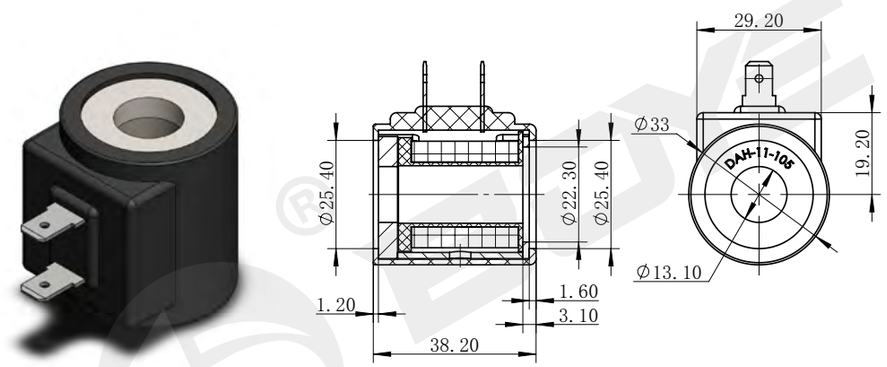

技术参数 /technical parameter					
环境温度 Ambienttemperature	°C	-25~50	防护等级 Degree of protection		IP65
电压波动范围 Voltage fluctuation range	%	85~110	通电持续率 Power on duration	%	100
额定功率 Rated power	W	20	绝缘等级 Insulation class		H（180）

样本数据来源于试验室环境，仅供参考，贵公司如需最新数据或有特殊需求，欢迎联系搏业液压工程师。
The sample data comes from the laboratory environment and is only for reference. If your company needs the latest data or has special needs, please contact Boye hydraulic engineer.

插装阀用线圈

Coil for cartridge valve

BYC02-14-01G

DC 24V
AC 220V
其它规格可定做
Other can be customized

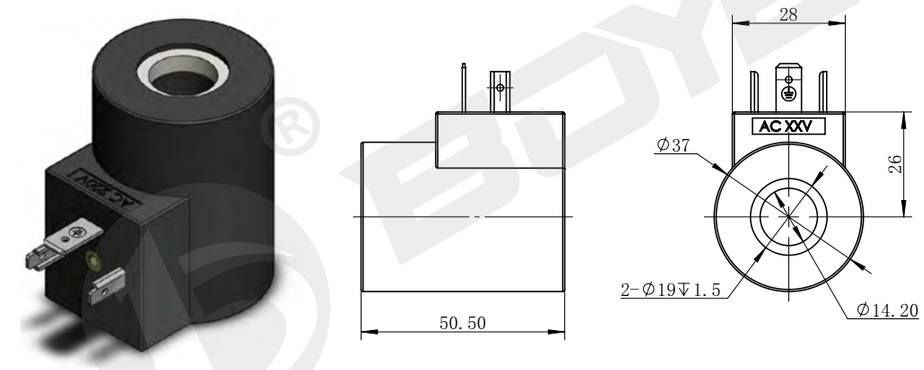

技术参数 /technical parameter					
环境温度 Ambienttemperature	°C	-25~50	防护等级 Degree of protection		IP65
电压波动范围 Voltage fluctuation range	%	85~110	通电持续率 Power on duration	%	100
额定功率 Rated power	W	20	绝缘等级 Insulation class		H（180）

BYC02-16-01G

DC 24V
AC 220V
其它规格可定做
Other can be customized

可定制比例型
Customizable proportions

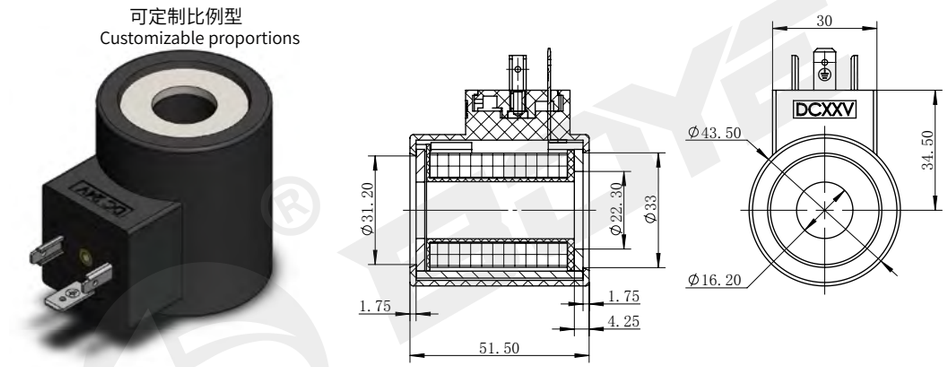

技术参数 /technical parameter					
环境温度 Ambienttemperature	°C	-25~50	防护等级 Degree of protection		IP65
电压波动范围 Voltage fluctuation range	%	85~110	通电持续率 Power on duration	%	100
额定功率 Rated power	W	20/28	绝缘等级 Insulation class		H（180）

样本数据来源于试验室环境，仅供参考，贵公司如需最新数据或有特殊需求，欢迎联系搏业液压工程师。
The sample data comes from the laboratory environment and is only for reference. If your company needs the latest data or has special needs, please contact Boye hydraulic engineer.

TEL:0574-86587131 www.nbboye.net

插装阀用线圈
Coil for cartridge valve

BYC02-16-01S

DC 24V
AC 220V
其它规格可定做
Other can be customized

可定制比例型
Customizable proportions

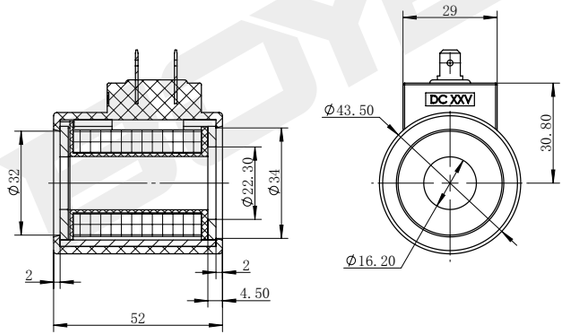

技术参数 /technical parameter					
环境温度 Ambienttemperature	°C	-25~50	防护等级 Degree of protection		IP65
电压波动范围 Voltage fluctuation range	%	85~110	通电持续率 Power on duration	%	100
额定功率 Rated power	W	20/28	绝缘等级 Insulation class		H（180）

BYC02-16-01L

DC 24V
AC 220V
其它规格可定做
Other can be customized

可定制比例型
Customizable proportions

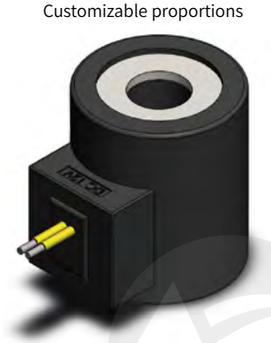

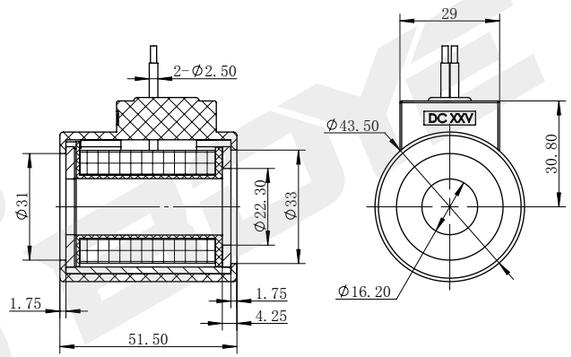

技术参数 /technical parameter					
环境温度 Ambienttemperature	°C	-25~50	防护等级 Degree of protection		IP67
电压波动范围 Voltage fluctuation range	%	85~110	通电持续率 Power on duration	%	100
额定功率 Rated power	W	20/28	绝缘等级 Insulation class		H（180）

样本数据来源于试验室环境，仅供参考，贵公司如需最新数据或有特殊需求，欢迎联系搏业液压工程师。
The sample data comes from the laboratory environment and is only for reference. If your company needs the latest data or has special needs, please contact Boye hydraulic engineer.

插装阀用线圈
Coil for cartridge valve

BYC02-16-01H

DC 24V
AC 220V
其它规格可定做
Other can be customized

可定制比例型
Customizable proportions

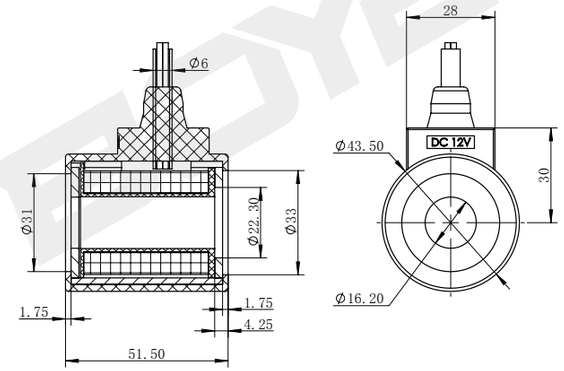

技术参数 /technical parameter					
环境温度 Ambienttemperature	°C	-25~50	防护等级 Degree of protection		IP67
电压波动范围 Voltage fluctuation range	%	85~110	通电持续率 Power on duration	%	100
额定功率 Rated power	W	20/28	绝缘等级 Insulation class		H（180）

BYC03-13-01G

DC 24V
AC 220V
其它规格可定做
Other can be customized

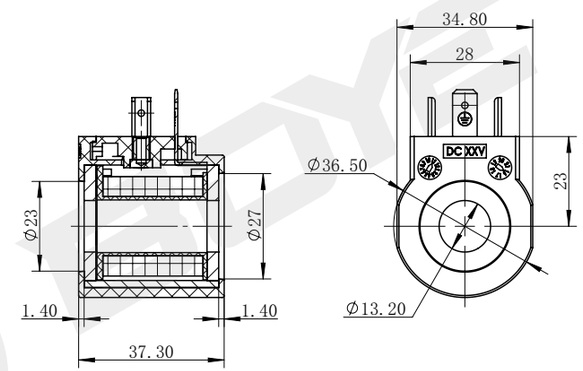

技术参数 /technical parameter					
环境温度 Ambienttemperature	°C	-25~50	防护等级 Degree of protection		IP65
电压波动范围 Voltage fluctuation range	%	85~110	通电持续率 Power on duration	%	100
额定功率 Rated power	W	20	绝缘等级 Insulation class		H（180）

样本数据来源于试验室环境，仅供参考，贵公司如需最新数据或有特殊需求，欢迎联系搏业液压工程师。
The sample data comes from the laboratory environment and is only for reference. If your company needs the latest data or has special needs, please contact Boye hydraulic engineer.

插装阀用线圈

Coil for cartridge valve

BYC03-16-01G

DC 24V
AC 220V
其它规格可定做
Other can be customized

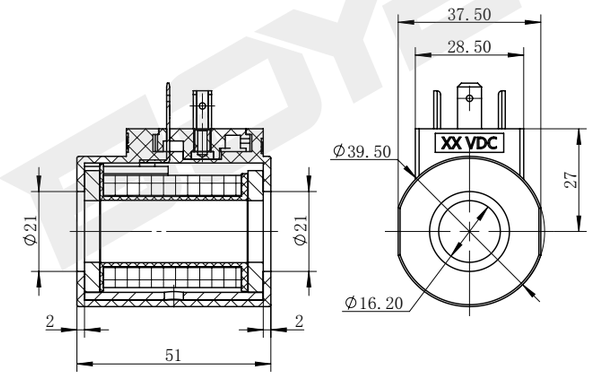

技术参数 /technical parameter					
环境温度 Ambienttemperature	℃	-25~50	防护等级 Degree of protection		IP65
电压波动范围 Voltage fluctuation range	%	85~110	通电持续率 Power on duration	%	100
额定功率 Rated power	W	26	绝缘等级 Insulation class		H（180）

BYC03-16-01D

DC 12V
DC 24V
其它规格可定做
Other can be customized

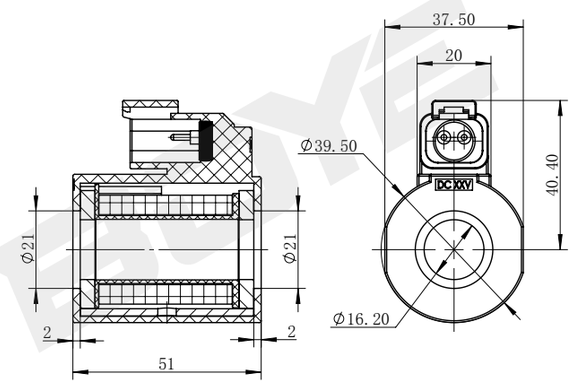

技术参数 /technical parameter					
环境温度 Ambienttemperature	℃	-25~50	防护等级 Degree of protection		IP67
电压波动范围 Voltage fluctuation range	%	85~110	通电持续率 Power on duration	%	100
额定功率 Rated power	W	26	绝缘等级 Insulation class		H（180）

样本数据来源于试验室环境，仅供参考，贵公司如需最新数据或有特殊需求，欢迎联系搏业液压工程师。
The sample data comes from the laboratory environment and is only for reference. If your company needs the latest data or has special needs, please contact Boye hydraulic engineer.

TEL:0574-86587131
www.nbboye.net

插装阀用线圈
Coil for cartridge valve

BYC03-16-01L

DC 24V
AC 220V
其它规格可定做
Other can be customized

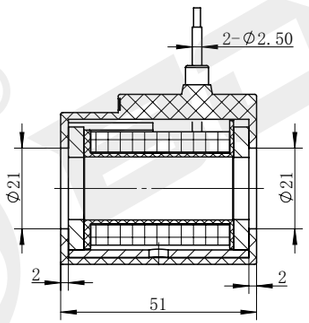

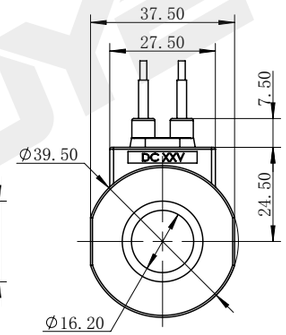

技术参数 /technical parameter					
环境温度 Ambienttemperature	°C	-25~50	防护等级 Degree of protection		IP67
电压波动范围 Voltage fluctuation range	%	85~110	通电持续率 Power on duration	%	100
额定功率 Rated power	W	26	绝缘等级 Insulation class		H（180）

BYC03-16-02J

DC 12V
DC 24V
其它规格可定做
Other can be customized

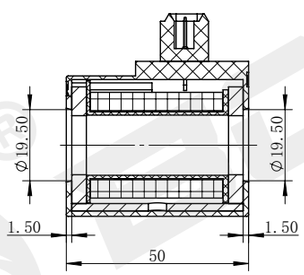

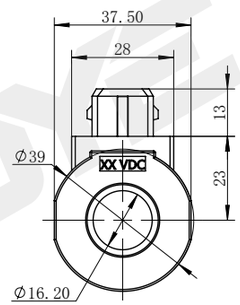

技术参数 /technical parameter					
环境温度 Ambienttemperature	°C	-25~50	防护等级 Degree of protection		IP67
电压波动范围 Voltage fluctuation range	%	85~110	通电持续率 Power on duration	%	100
额定功率 Rated power	W	21/25	绝缘等级 Insulation class		H（180）

样本数据来源于试验室环境，仅供参考，贵公司如需最新数据或有特殊需求，欢迎联系搏业液压工程师。
The sample data comes from the laboratory environment and is only for reference. If your company needs the latest data or has special needs, please contact Boye hydraulic engineer.

插装阀用线圈
Coil for cartridge valve

BYC03-16-02K27

DC 12V
DC 24V
其它规格可定做
Other can be customized

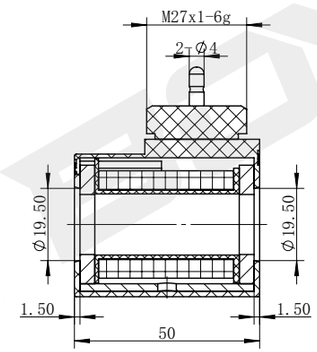

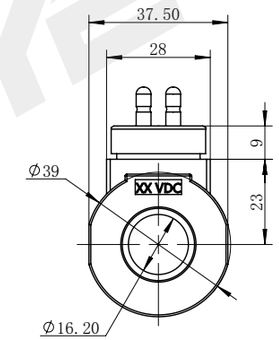

技术参数 /technical parameter					
环境温度 Ambienttemperature	°C	-25~50	防护等级 Degree of protection		IP65
电压波动范围 Voltage fluctuation range	%	85~110	通电持续率 Power on duration	%	100
额定功率 Rated power	W	21/25	绝缘等级 Insulation class		H（180）

BYC03-16-03G

DC 24V
AC 220V
其它规格可定做
Other can be customized

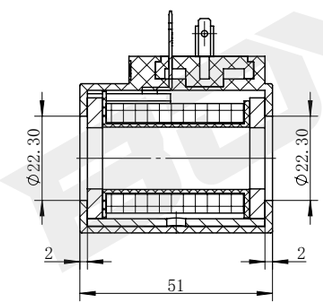

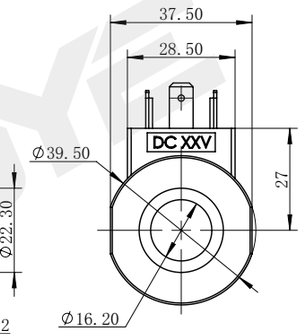

技术参数 /technical parameter					
环境温度 Ambienttemperature	°C	-25~50	防护等级 Degree of protection		IP65
电压波动范围 Voltage fluctuation range	%	85~110	通电持续率 Power on duration	%	100
额定功率 Rated power	W	26	绝缘等级 Insulation class		H（180）

样本数据来源于试验室环境，仅供参考，贵公司如需最新数据或有特殊需求，欢迎联系搏业液压工程师。
The sample data comes from the laboratory environment and is only for reference. If your company needs the latest data or has special needs, please contact Boye hydraulic engineer.

TEL:0574-86587131 www.nbboye.net

插装阀用线圈

Coil for cartridge valve

DC 24V
AC 220V
其它规格可定做
Other can be customized

BYC04-13-01G

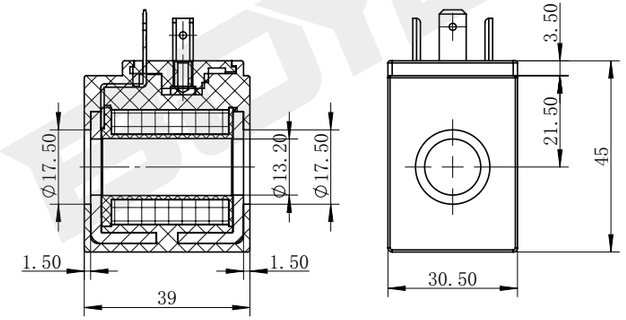

技术参数 /technical parameter					
环境温度 Ambienttemperature	℃	-25~50	防护等级 Degree of protection		IP65
电压波动范围 Voltage fluctuation range	%	85~110	通电持续率 Power on duration	%	100
额定功率 Rated power	W	18	绝缘等级 Insulation class		H（180）

DC 24V
AC 220V
其它规格可定做
Other can be customized

BYC04-13-01L

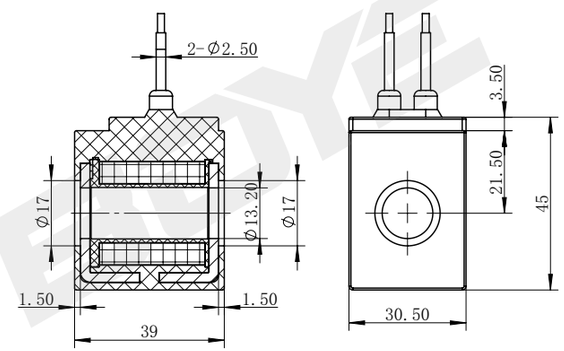

技术参数 /technical parameter					
环境温度 Ambienttemperature	℃	-25~50	防护等级 Degree of protection		IP67
电压波动范围 Voltage fluctuation range	%	85~110	通电持续率 Power on duration	%	100
额定功率 Rated power	W	18	绝缘等级 Insulation class		H（180）

样本数据来源于试验室环境，仅供参考，贵公司如需最新数据或有特殊需求，欢迎联系搏业液压工程师。
The sample data comes from the laboratory environment and is only for reference. If your company needs the latest data or has special needs, please contact Boye hydraulic engineer.

TEL:0574-86587131
www.nbboye.net

插装阀用线圈
Coil for cartridge valve

DC 12V
DC 24V
其它规格可定做
Other can be customized

BYC04-13-02J

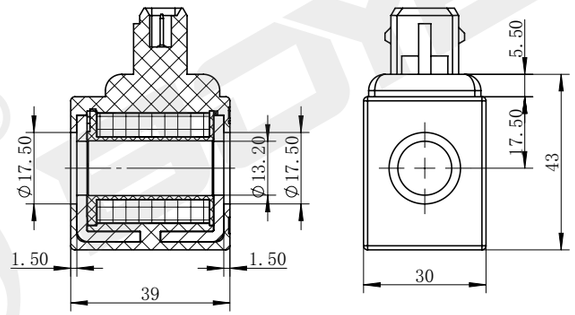

技术参数 /technical parameter					
环境温度 Ambienttemperature	°C	-25~50	防护等级 Degree of protection		IP67
电压波动范围 Voltage fluctuation range	%	85~110	通电持续率 Power on duration	%	100
额定功率 Rated power	W	18	绝缘等级 Insulation class		H（180）

插装阀用线圈
Coil for cartridge valve

DC 12V
DC 24V
其它规格可定做
Other can be customized

BYC04-13-02K27

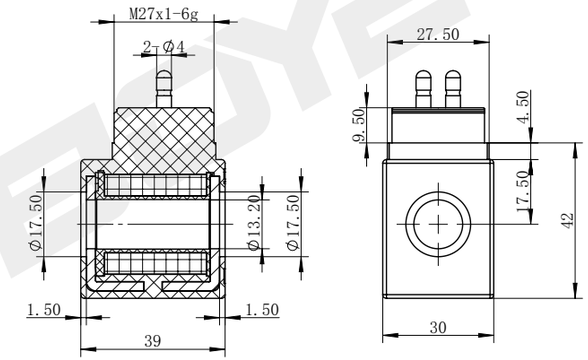

技术参数 /technical parameter					
环境温度 Ambienttemperature	°C	-25~50	防护等级 Degree of protection		IP65
电压波动范围 Voltage fluctuation range	%	85~110	通电持续率 Power on duration	%	100
额定功率 Rated power	W	18	绝缘等级 Insulation class		H（180）

DC 12V
DC 24V
其它规格可定做
Other can be customized

BYC04-13-02K24

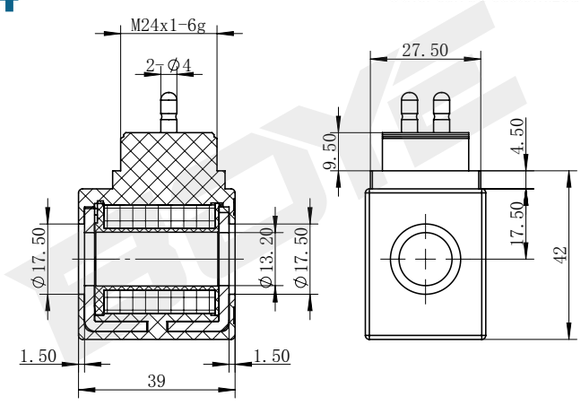

技术参数 /technical parameter					
环境温度 Ambienttemperature	°C	-25~50	防护等级 Degree of protection		IP65
电压波动范围 Voltage fluctuation range	%	85~110	通电持续率 Power on duration	%	100
额定功率 Rated power	W	18	绝缘等级 Insulation class		H（180）

DC 12V
DC 24V
其它规格可定做
Other can be customized

BYC04-13-03D

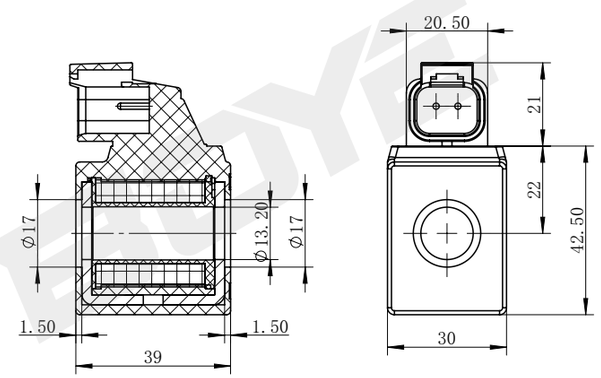

技术参数 /technical parameter					
环境温度 Ambienttemperature	°C	-25~50	防护等级 Degree of protection		IP67
电压波动范围 Voltage fluctuation range	%	85~110	通电持续率 Power on duration	%	100
额定功率 Rated power	W	18	绝缘等级 Insulation class		H（180）

样本数据来源于试验室环境，仅供参考，贵公司如需最新数据或有特殊需求，欢迎联系搏业液压工程师。
The sample data comes from the laboratory environment and is only for reference. If your company needs the latest data or has special needs, please contact Boye hydraulic engineer.

插装阀用线圈

Coil for cartridge valve

DC 24V
AC 220V
其它规格可定做
Other can be customized

BYC04-13-04G

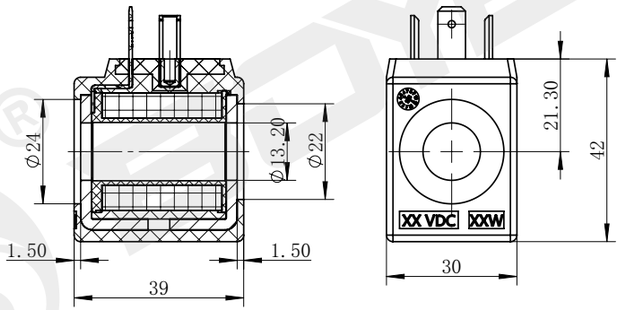

技术参数 /technical parameter					
环境温度 Ambienttemperature	°C	-25~50	防护等级 Degree of protection		IP65
电压波动范围 Voltage fluctuation range	%	85~110	通电持续率 Power on duration	%	100
额定功率 Rated power	W	18	绝缘等级 Insulation class		H（180）

DC 24V
AC 220V
其它规格可定做
Other can be customized

BYC04-13-05S

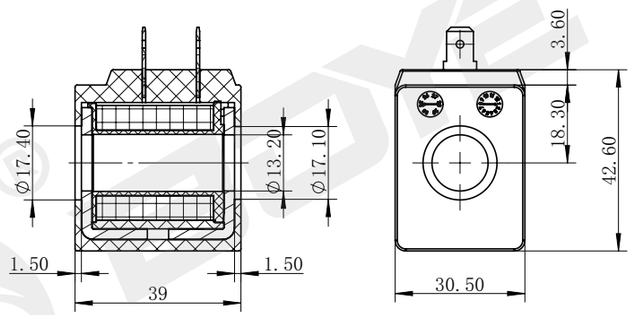

技术参数 /technical parameter					
环境温度 Ambienttemperature	°C	-25~50	防护等级 Degree of protection		IP65
电压波动范围 Voltage fluctuation range	%	85~110	通电持续率 Power on duration	%	100
额定功率 Rated power	W	18	绝缘等级 Insulation class		H（180）

样本数据来源于试验室环境，仅供参考，贵公司如需最新数据或有特殊需求，欢迎联系搏业液压工程师。
The sample data comes from the laboratory environment and is only for reference. If your company needs the latest data or has special needs, please contact Boye hydraulic engineer.

插装阀用线圈

Coil for cartridge valve

DC 24V
AC 220V
其它规格可定做
Other can be customized

BYC05-13-01G

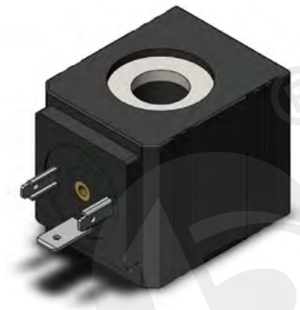

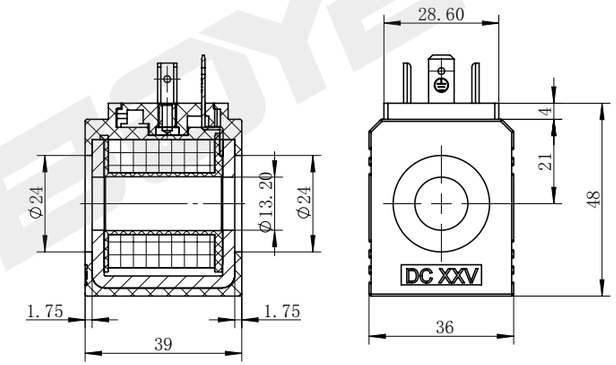

技术参数 /technical parameter					
环境温度 Ambienttemperature	°C	-25~50	防护等级 Degree of protection		IP65
电压波动范围 Voltage fluctuation range	%	85~110	通电持续率 Power on duration	%	100
额定功率 Rated power	W	20	绝缘等级 Insulation class		H（180）

DC 24V
AC 220V
其它规格可定做
Other can be customized

BYC05-13-03G

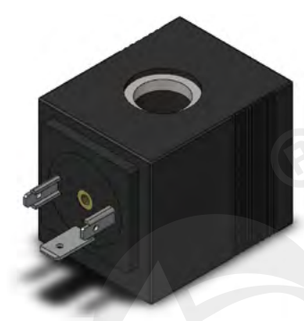

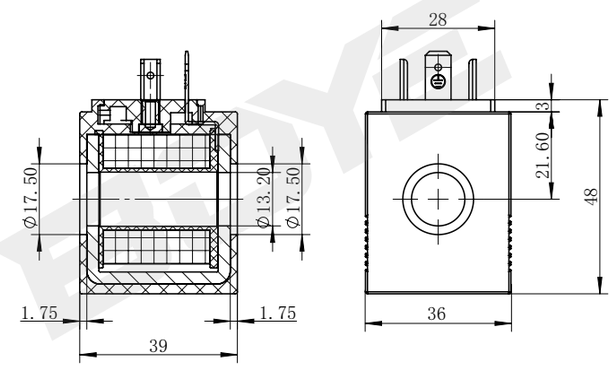

技术参数 /technical parameter					
环境温度 Ambienttemperature	°C	-25~50	防护等级 Degree of protection		IP65
电压波动范围 Voltage fluctuation range	%	85~110	通电持续率 Power on duration	%	100
额定功率 Rated power	W	20	绝缘等级 Insulation class		H（180）

样本数据来源于试验室环境，仅供参考，贵公司如需最新数据或有特殊需求，欢迎联系搏业液压工程师。
The sample data comes from the laboratory environment and is only for reference. If your company needs the latest data or has special needs, please contact Boye hydraulic engineer.

TEL:0574-86587131 www.nbboye.net

插装阀用线圈

Coil for cartridge valve

BYC05-13-04G

DC 24V
AC 220V
其它规格可定做
Other can be customized

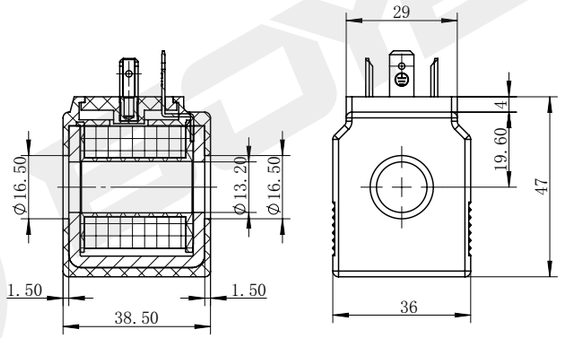

技术参数 /technical parameter					
环境温度 Ambienttemperature	°C	-25~50	防护等级 Degree of protection		IP65
电压波动范围 Voltage fluctuation range	%	85~110	通电持续率 Power on duration	%	100
额定功率 Rated power	W	20	绝缘等级 Insulation class		H（180）

BYC05-13-04L

DC 24V
AC 220V
其它规格可定做
Other can be customized

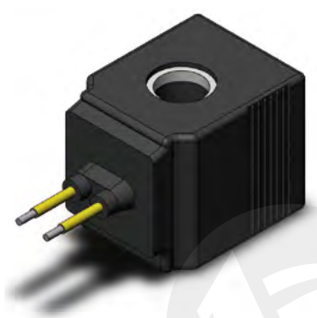

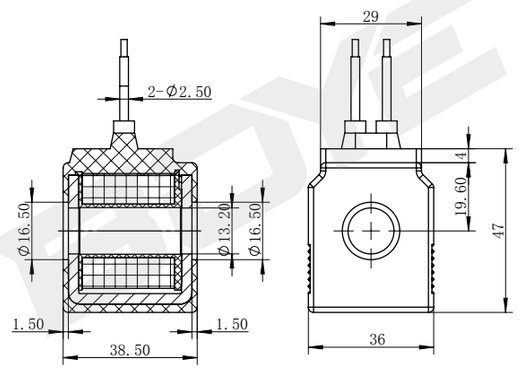

技术参数 /technical parameter					
环境温度 Ambienttemperature	°C	-25~50	防护等级 Degree of protection		IP67
电压波动范围 Voltage fluctuation range	%	85~110	通电持续率 Power on duration	%	100
额定功率 Rated power	W	20	绝缘等级 Insulation class		H（180）

样本数据来源于试验室环境，仅供参考，贵公司如需最新数据或有特殊需求，欢迎联系搏业液压工程师。
The sample data comes from the laboratory environment and is only for reference. If your company needs the latest data or has special needs, please contact Boye hydraulic engineer.

插装阀用线圈

Coil for cartridge valve

BYC05-13-04P

DC 12V
DC 24V
其它规格可定做
Other can be customized

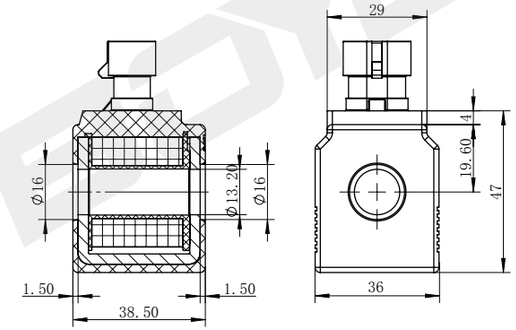

技术参数 /technical parameter					
环境温度 Ambienttemperature	°C	-25~50	防护等级 Degree of protection		IP67
电压波动范围 Voltage fluctuation range	%	85~110	通电持续率 Power on duration	%	100
额定功率 Rated power	W	20	绝缘等级 Insulation class		H（180）

BYC05-13-05G

DC 24V
AC 220V
其它规格可定做
Other can be customized

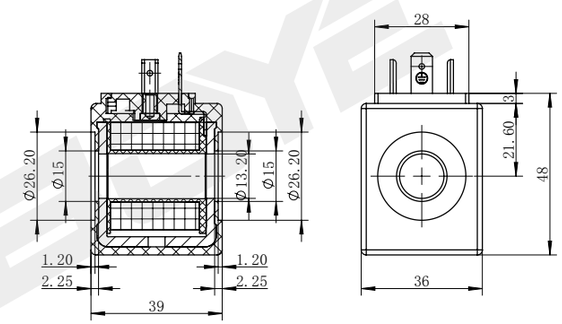

技术参数 /technical parameter					
环境温度 Ambienttemperature	°C	-25~50	防护等级 Degree of protection		IP65
电压波动范围 Voltage fluctuation range	%	85~110	通电持续率 Power on duration	%	100
额定功率 Rated power	W	20	绝缘等级 Insulation class		H（180）

样本数据来源于试验室环境，仅供参考，贵公司如需最新数据或有特殊需求，欢迎联系搏业液压工程师。
The sample data comes from the laboratory environment and is only for reference. If your company needs the latest data or has special needs, please contact Boye hydraulic engineer.

TEL:0574-86587131 www.nbboye.net

插装阀用线圈

Coil for cartridge valve

BYC05-13-05D

DC 12V
DC 24V

其它规格可定做
Other can be customized

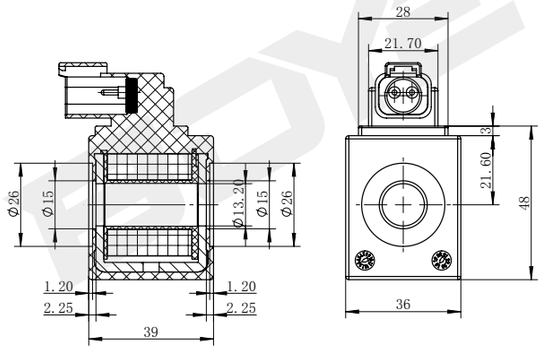

技术参数 /technical parameter					
环境温度 Ambienttemperature	°C	-25~50	防护等级 Degree of protection		IP67
电压波动范围 Voltage fluctuation range	%	85~110	通电持续率 Power on duration	%	100
额定功率 Rated power	W	20	绝缘等级 Insulation class		H（180）

DC 12V
DC 24V

其它规格可定做
Other can be customized

BYC05-13-06D

比例型
proportional type

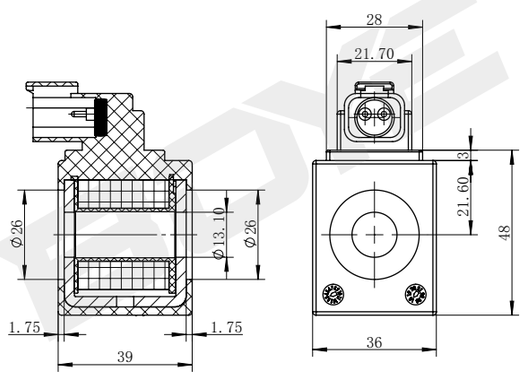

技术参数 /technical parameter					
环境温度 Ambienttemperature	°C	-25~50	防护等级 Degree of protection		IP67
电压波动范围 Voltage fluctuation range	%	85~110	通电持续率 Power on duration	%	100
额定功率 Rated power	W	20	绝缘等级 Insulation class		H（180）

样本数据来源于试验室环境，仅供参考，贵公司如需最新数据或有特殊需求，欢迎联系搏业液压工程师。
The sample data comes from the laboratory environment and is only for reference. If your company needs the latest data or has special needs, please contact Boye hydraulic engineer.

插装阀用线圈
Coil for cartridge valve

DC 24V
AC 220V
其它规格可定做
Other can be customized

BYC06-16-01G

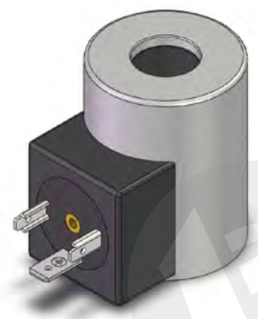

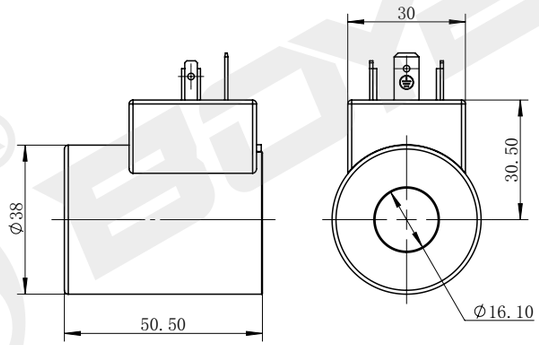

技术参数 /technical parameter					
环境温度 Ambienttemperature	°C	-25~50	防护等级 Degree of protection		IP65
电压波动范围 Voltage fluctuation range	%	85~110	通电持续率 Power on duration	%	100
额定功率 Rated power	W	25	绝缘等级 Insulation class		H（180）

DC 24V
AC 220V
其它规格可定做
Other can be customized

BYC06-16A-01L

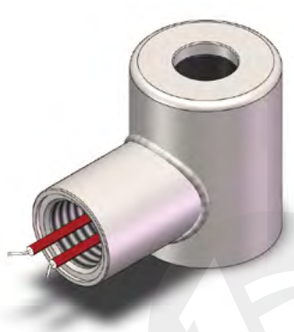

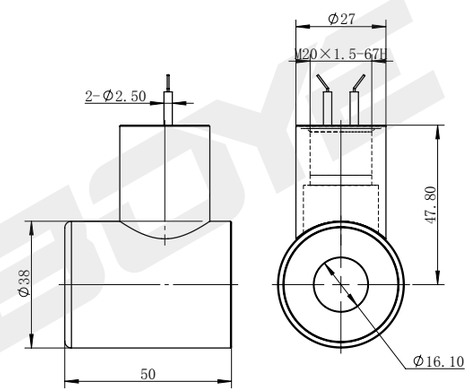

技术参数 /technical parameter					
环境温度 Ambienttemperature	°C	-25~50	防护等级 Degree of protection		IP67
电压波动范围 Voltage fluctuation range	%	85~110	通电持续率 Power on duration	%	100
额定功率 Rated power	W	22	绝缘等级 Insulation class		H（180）

样本数据来源于试验室环境，仅供参考，贵公司如需最新数据或有特殊需求，欢迎联系搏业液压工程师。
The sample data comes from the laboratory environment and is only for reference. If your company needs the latest data or has special needs, please contact Boye hydraulic engineer.

插装阀用线圈
Coil for cartridge valve

DC 24V
AC 220V
其它规格可定做
Other can be customized

BYC06-17-01W

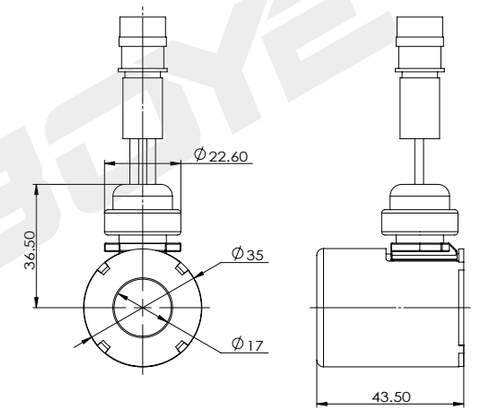

技术参数 /technical parameter					
环境温度 Ambienttemperature	°C	-25~50	防护等级 Degree of protection		IP67
电压波动范围 Voltage fluctuation range	%	85~110	通电持续率 Power on duration	%	100
额定功率 Rated power	W	22	绝缘等级 Insulation class		H（180）

DC 24V
AC 220V
其它规格可定做
Other can be customized

BYC06-18-01G

可定制比例型
Customizable proportions

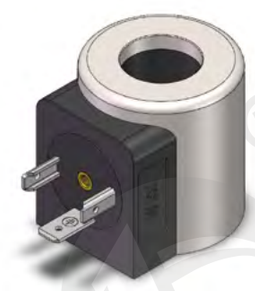

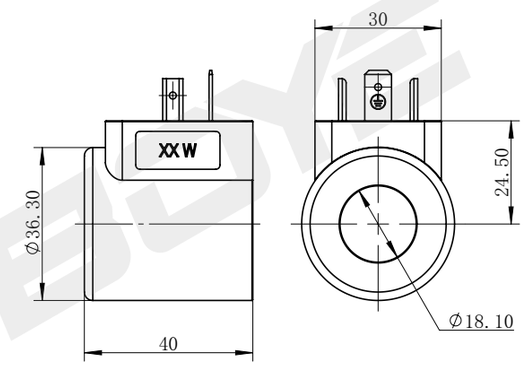

技术参数 /technical parameter					
环境温度 Ambienttemperature	°C	-25~50	防护等级 Degree of protection		IP65
电压波动范围 Voltage fluctuation range	%	85~110	通电持续率 Power on duration	%	100
额定功率 Rated power	W	20/23/26	绝缘等级 Insulation class		H（180）

样本数据来源于试验室环境，仅供参考，贵公司如需最新数据或有特殊需求，欢迎联系搏业液压工程师。
The sample data comes from the laboratory environment and is only for reference. If your company needs the latest data or has special needs, please contact Boye hydraulic engineer.

TEL:0574-86587131 www.nbboye.net

插装阀用线圈

Coil for cartridge valve

DC 12V
DC 24V
其它规格可定做
Other can be customized

BYC06-18-01D

可定制比例型
Customizable proportions

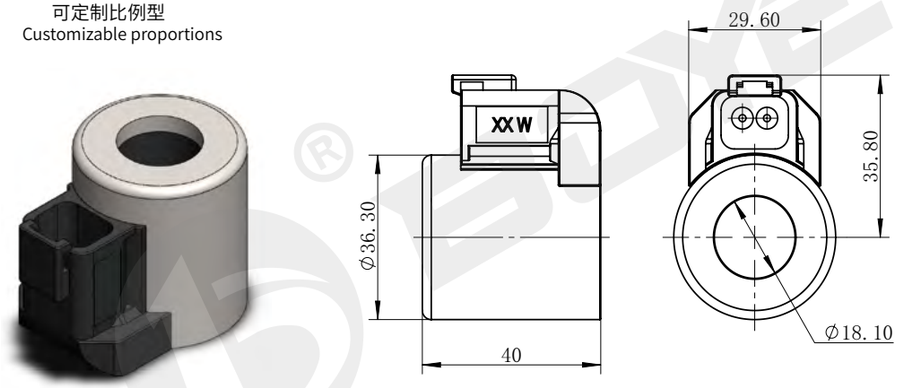

技术参数 /technical parameter					
环境温度 Ambienttemperature	°C	-25~50	防护等级 Degree of protection		IP67
电压波动范围 Voltage fluctuation range	%	85~110	通电持续率 Power on duration	%	100
额定功率 Rated power	W	20/23/26	绝缘等级 Insulation class		H（180）

DC 24V
AC 220V
其它规格可定做
Other can be customized

BYC06-18-01H

可定制比例型
Customizable proportions

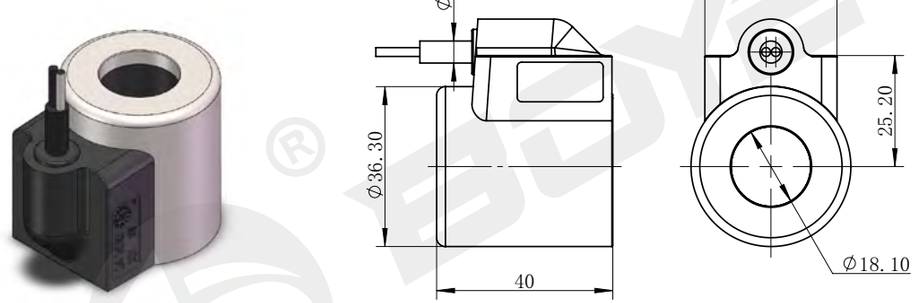

技术参数 /technical parameter					
环境温度 Ambienttemperature	°C	-25~50	防护等级 Degree of protection		IP67
电压波动范围 Voltage fluctuation range	%	85~110	通电持续率 Power on duration	%	100
额定功率 Rated power	W	20/23/26	绝缘等级 Insulation class		H（180）

样本数据来源于试验室环境，仅供参考，贵公司如需最新数据或有特殊需求，欢迎联系搏业液压工程师。
The sample data comes from the laboratory environment and is only for reference. If your company needs the latest data or has special needs, please contact Boye hydraulic engineer.

插装阀用线圈

Coil for cartridge valve

DC 12V
DC 24V
其它规格可定做
Other can be customized

BYC06-18-01K24

可定制比例型
Customizable proportions

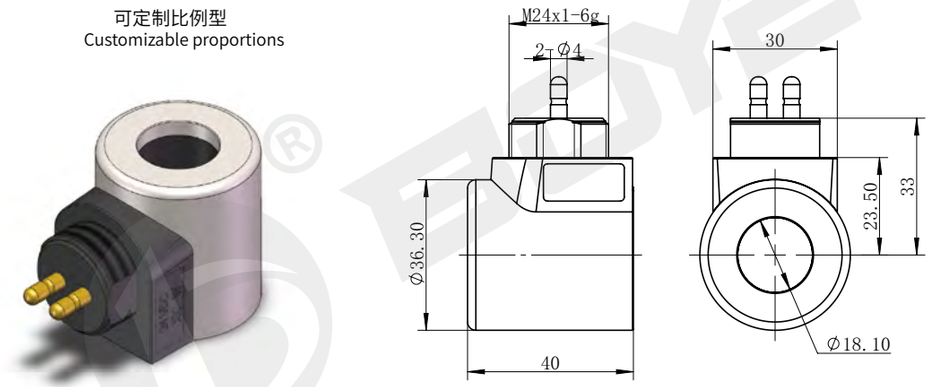

技术参数 /technical parameter					
环境温度 Ambienttemperature	°C	-25~50	防护等级 Degree of protection		IP65
电压波动范围 Voltage fluctuation range	%	85~110	通电持续率 Power on duration	%	100
额定功率 Rated power	W	20/23/26	绝缘等级 Insulation class		H（180）

DC 12V
DC 24V
其它规格可定做
Other can be customized

BYC06-18-01K27

可定制比例型
Customizable proportions

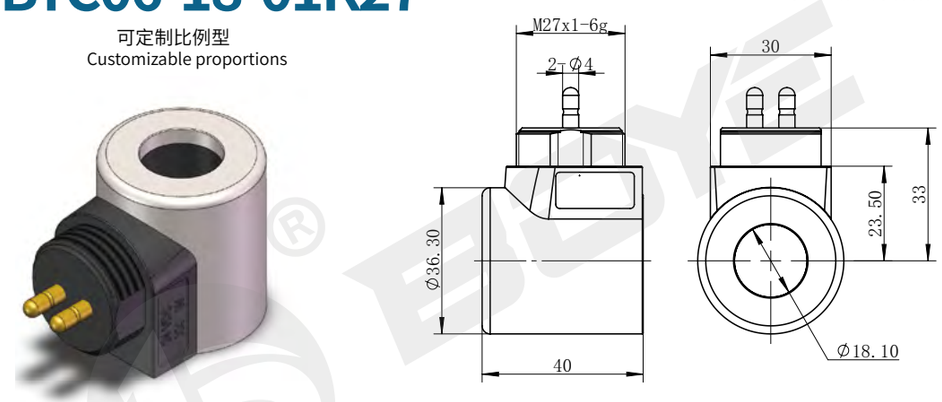

技术参数 /technical parameter					
环境温度 Ambienttemperature	°C	-25~50	防护等级 Degree of protection		IP65
电压波动范围 Voltage fluctuation range	%	85~110	通电持续率 Power on duration	%	100
额定功率 Rated power	W	20/23/26	绝缘等级 Insulation class		H（180）

样本数据来源于试验室环境，仅供参考，贵公司如需最新数据或有特殊需求，欢迎联系搏业液压工程师。
The sample data comes from the laboratory environment and is only for reference. If your company needs the latest data or has special needs, please contact Boye hydraulic engineer.

www.nbboye.net TEL:0574-86587113

插装阀用线圈

Coil for cartridge valve

DC 24V
AC 220V
其它规格可定做
Other can be customized

BYC06-18-02H

可定制比例型
Customizable proportions

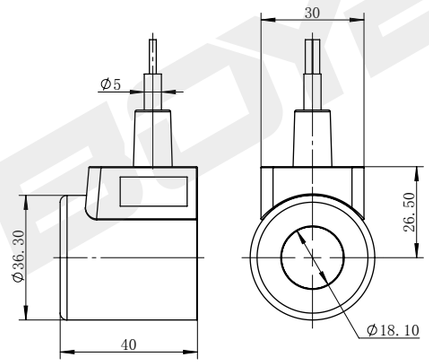

技术参数 /technical parameter					
环境温度 Ambienttemperature	°C	-25~50	防护等级 Degree of protection		IP67
电压波动范围 Voltage fluctuation range	%	85~110	通电持续率 Power on duration	%	100
额定功率 Rated power	W	20/23/26	绝缘等级 Insulation class		H（180）

DC 24V
AC 220V
其它规格可定做
Other can be customized

BYC06-18-02L

可定制比例型
Customizable proportions

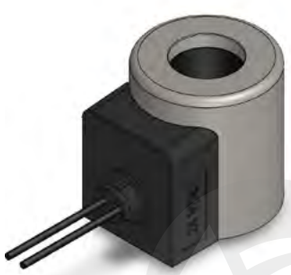

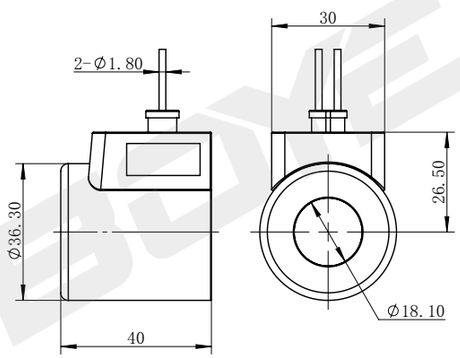

技术参数 /technical parameter					
环境温度 Ambienttemperature	°C	-25~50	防护等级 Degree of protection		IP67
电压波动范围 Voltage fluctuation range	%	85~110	通电持续率 Power on duration	%	100
额定功率 Rated power	W	20/23/26	绝缘等级 Insulation class		H（180）

样本数据来源于试验室环境，仅供参考，贵公司如需最新数据或有特殊需求，欢迎联系搏业液压工程师。
The sample data comes from the laboratory environment and is only for reference. If your company needs the latest data or has special needs, please contact Boye hydraulic engineer.

插装阀用线圈

Coil for cartridge valve

DC 12V
DC 24V
其它规格可定做
Other can be customized

BYC06-19-01D

可定制比例型
Customizable proportions

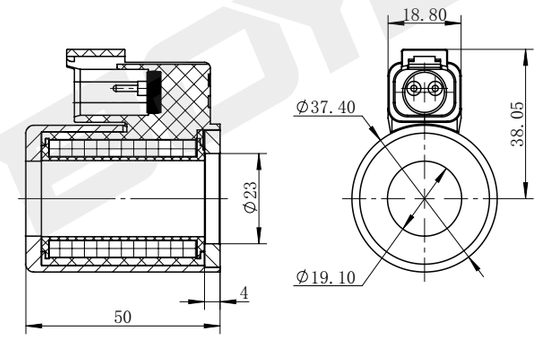

技术参数 /technical parameter					
环境温度 Ambienttemperature	°C	-25~50	防护等级 Degree of protection		IP67
电压波动范围 Voltage fluctuation range	%	85~110	通电持续率 Power on duration	%	100
额定功率 Rated power	W	22	绝缘等级 Insulation class		H（180）

DC 24V
AC 220V
其它规格可定做
Other can be customized

BYC06-19-01G

可定制比例型
Customizable proportions

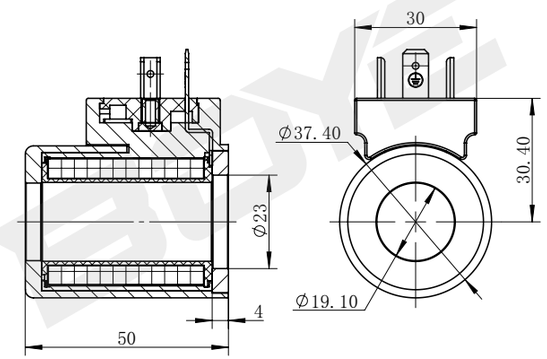

技术参数 /technical parameter					
环境温度 Ambienttemperature	°C	-25~50	防护等级 Degree of protection		IP65
电压波动范围 Voltage fluctuation range	%	85~110	通电持续率 Power on duration	%	100
额定功率 Rated power	W	22/36	绝缘等级 Insulation class		H（180）

样本数据来源于试验室环境，仅供参考，贵公司如需最新数据或有特殊需求，欢迎联系搏业液压工程师。
The sample data comes from the laboratory environment and is only for reference. If your company needs the latest data or has special needs, please contact Boye hydraulic engineer.

TEL:0574-86587131 www.nbboye.net

插装阀用线圈

Coil for cartridge valve

DC 12V
DC 24V
其它规格可定做
Other can be customized

BYC06-19-01J

可定制比例型
Customizable proportions

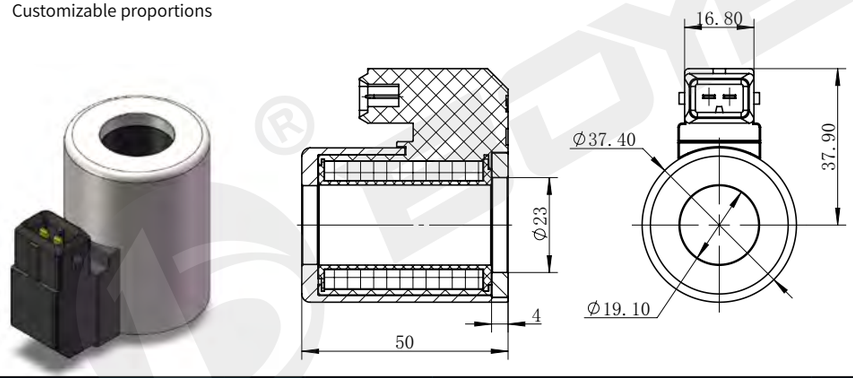

技术参数 /technical parameter					
环境温度 Ambienttemperature	°C	-25~50	防护等级 Degree of protection		IP67
电压波动范围 Voltage fluctuation range	%	85~110	通电持续率 Power on duration	%	100
额定功率 Rated power	W	22/36	绝缘等级 Insulation class		H（180）

DC 12V
DC 24V
其它规格可定做
Other can be customized

BYC06-19-02D

可定制比例型
Customizable proportions

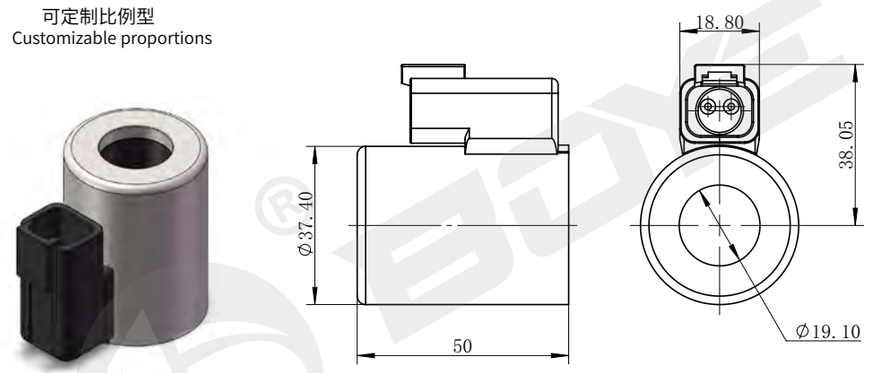

技术参数 /technical parameter					
环境温度 Ambienttemperature	°C	-25~50	防护等级 Degree of protection		IP67
电压波动范围 Voltage fluctuation range	%	85~110	通电持续率 Power on duration	%	100
额定功率 Rated power	W	22/36	绝缘等级 Insulation class		H（180）

样本数据来源于试验室环境，仅供参考，贵公司如需最新数据或有特殊需求，欢迎联系搏业液压工程师。
The sample data comes from the laboratory environment and is only for reference. If your company needs the latest data or has special needs, please contact Boye hydraulic engineer.

插装阀用线圈

Coil for cartridge valve

DC 12V
DC 24V
其它规格可定做
Other can be customized

BYC06-19-02J

可定制比例型
Customizable proportions

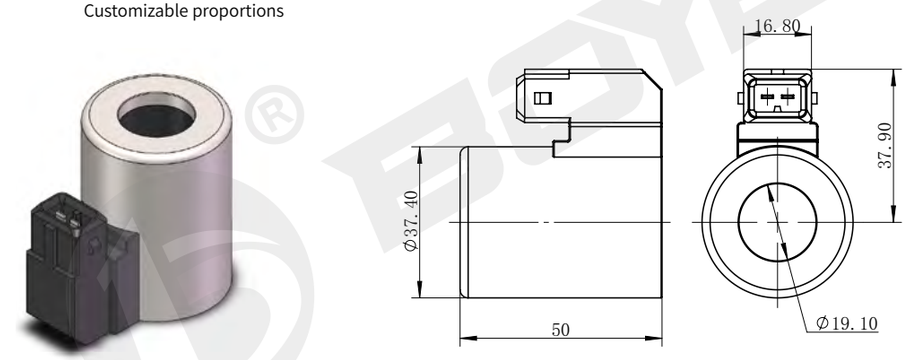

技术参数 /technical parameter					
环境温度 Ambienttemperature	°C	-25~50	防护等级 Degree of protection		IP67
电压波动范围 Voltage fluctuation range	%	85~110	通电持续率 Power on duration	%	100
额定功率 Rated power	W	22/36	绝缘等级 Insulation class		H（180）

DC24V
AC220V
其它规格可定做
Other can be customized

BYC06-19-02G

可定制比例型
Customizable proportions

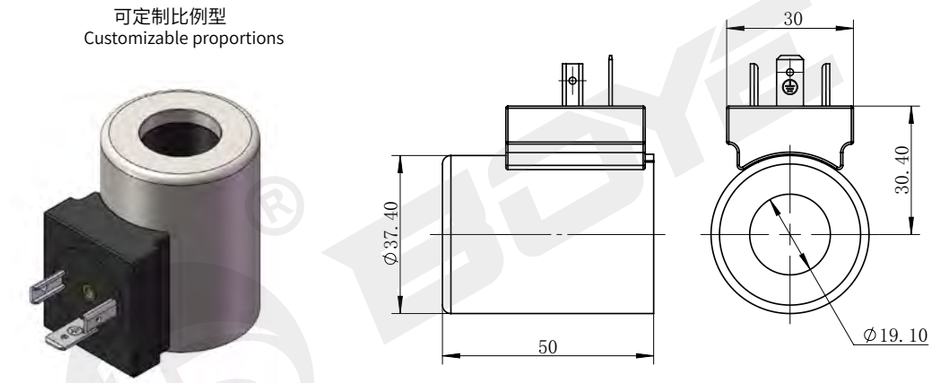

技术参数 /technical parameter					
环境温度 Ambienttemperature	°C	-25~50	防护等级 Degree of protection		IP65
电压波动范围 Voltage fluctuation range	%	85~110	通电持续率 Power on duration	%	100
额定功率 Rated power	W	22/36	绝缘等级 Insulation class		H（180）

样本数据来源于试验室环境，仅供参考，贵公司如需最新数据或有特殊需求，欢迎联系搏业液压工程师。
The sample data comes from the laboratory environment and is only for reference. If your company needs the latest data or has special needs, please contact Boye hydraulic engineer.

插装阀用线圈

Coil for cartridge valve

BYC06-19-03D

DC 12V
DC 24V
其它规格可定做
Other can be customized

可定制比例型
Customizable proportions

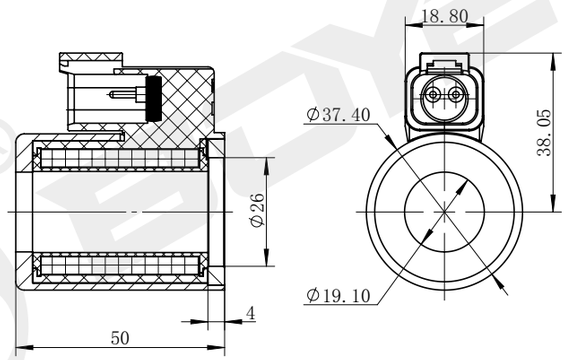

技术参数 /technical parameter					
环境温度 Ambienttemperature	°C	-25~50	防护等级 Degree of protection		IP67
电压波动范围 Voltage fluctuation range	%	85~110	通电持续率 Power on duration	%	100
额定功率 Rated power	W	22/36	绝缘等级 Insulation class		H（180）

BYC06-19-03G

DC24V
AC220V
其它规格可定做
Other can be customized

可定制比例型
Customizable proportions

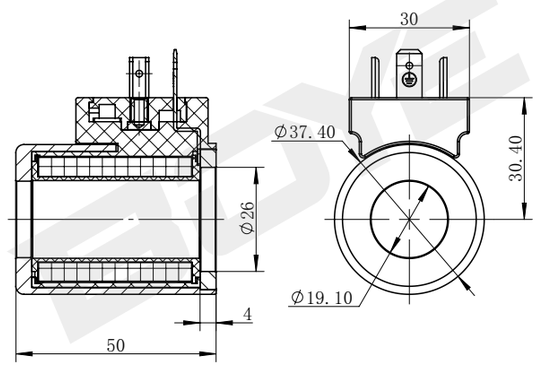

技术参数 /technical parameter					
环境温度 Ambienttemperature	°C	-25~50	防护等级 Degree of protection		IP65
电压波动范围 Voltage fluctuation range	%	85~110	通电持续率 Power on duration	%	100
额定功率 Rated power	W	22/36	绝缘等级 Insulation class		H（180）

样本数据来源于试验室环境，仅供参考，贵公司如需最新数据或有特殊需求，欢迎联系搏业液压工程师。
The sample data comes from the laboratory environment and is only for reference. If your company needs the latest data or has special needs, please contact Boye hydraulic engineer.

插装阀用线圈

Coil for cartridge valve

BYC06-19-03J

DC 12V
DC 24V
其它规格可定做
Other can be customized

可定制比例型
Customizable proportions

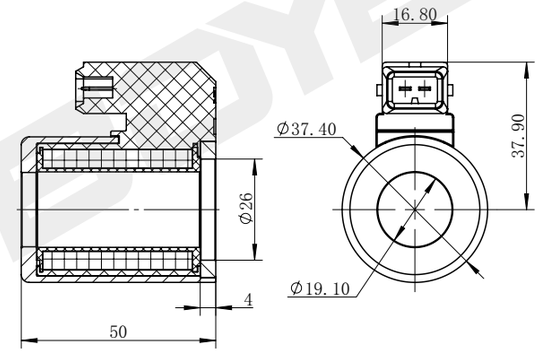

技术参数 /technical parameter					
环境温度 Ambienttemperature	°C	-25~50	防护等级 Degree of protection		IP67
电压波动范围 Voltage fluctuation range	%	85~110	通电持续率 Power on duration	%	100
额定功率 Rated power	W	22/36	绝缘等级 Insulation class		H（180）

BYC06-19A-01G

DC 24V
AC 220V
其它规格可定做
Other can be customized

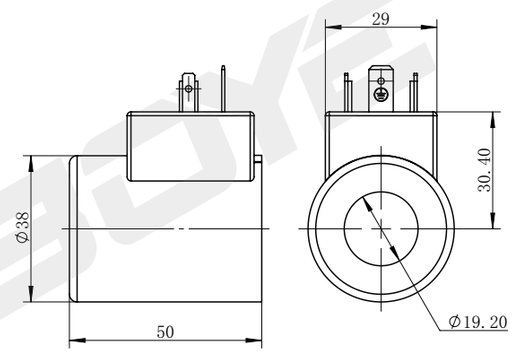

技术参数 /technical parameter					
环境温度 Ambienttemperature	°C	-25~50	防护等级 Degree of protection		IP65
电压波动范围 Voltage fluctuation range	%	85~110	通电持续率 Power on duration	%	100
额定功率 Rated power	W	22	绝缘等级 Insulation class		H（180）

样本数据来源于试验室环境，仅供参考，贵公司如需最新数据或有特殊需求，欢迎联系搏业液压工程师。
The sample data comes from the laboratory environment and is only for reference. If your company needs the latest data or has special needs, please contact Boye hydraulic engineer.

TEL:0574-86587131 www.nbboye.net

插装阀用线圈

Coil for cartridge valve

DC 12V
DC 24V
其它规格可定做
Other can be customized

BYC06-19B-01D

可定制比例型
Customizable proportions

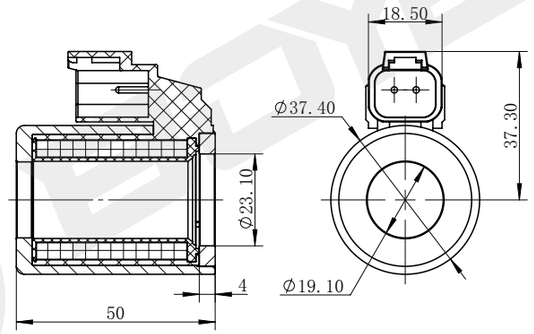

技术参数 /technical parameter					
环境温度 Ambienttemperature	°C	-25~50	防护等级 Degree of protection		IP67
电压波动范围 Voltage fluctuation range	%	85~110	通电持续率 Power on duration	%	100
额定功率 Rated power	W	26	绝缘等级 Insulation class		H（180）

DC 12V
DC 24V
其它规格可定做
Other can be customized

BYC06-19B-01J

可定制比例型
Customizable proportions

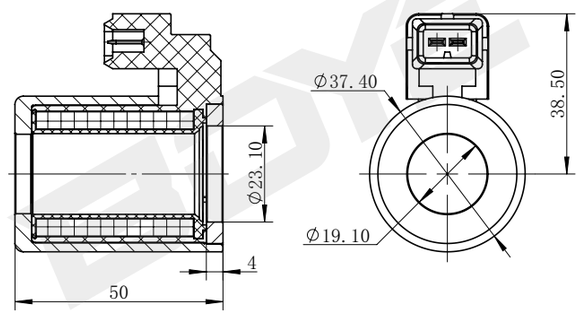

技术参数 /technical parameter					
环境温度 Ambienttemperature	°C	-25~50	防护等级 Degree of protection		IP67
电压波动范围 Voltage fluctuation range	%	85~110	通电持续率 Power on duration	%	100
额定功率 Rated power	W	26	绝缘等级 Insulation class		H（180）

样本数据来源于试验室环境，仅供参考，贵公司如需最新数据或有特殊需求，欢迎联系搏业液压工程师。
The sample data comes from the laboratory environment and is only for reference. If your company needs the latest data or has special needs, please contact Boye hydraulic engineer.

插装阀用线圈

Coil for cartridge valve

DC 12V
DC 24V
其它规格可定做
Other can be customized

BYC06-19B-02D

可定制比例型
Customizable proportions

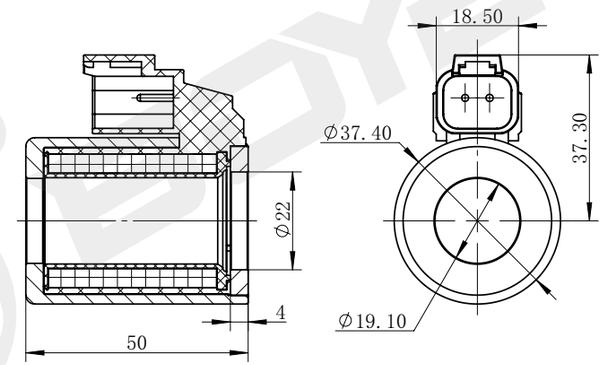

技术参数 /technical parameter					
环境温度 Ambienttemperature	°C	-25~50	防护等级 Degree of protection		IP67
电压波动范围 Voltage fluctuation range	%	85~110	通电持续率 Power on duration	%	100
额定功率 Rated power	W	26	绝缘等级 Insulation class		H（180）

DC 12V
DC 24V
其它规格可定做
Other can be customized

BYC06-19B-02J

可定制比例型
Customizable proportions

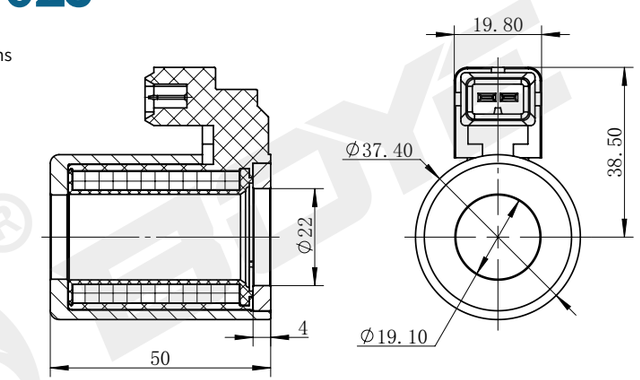

技术参数 /technical parameter					
环境温度 Ambienttemperature	°C	-25~50	防护等级 Degree of protection		IP67
电压波动范围 Voltage fluctuation range	%	85~110	通电持续率 Power on duration	%	100
额定功率 Rated power	W	26	绝缘等级 Insulation class		H（180）

样本数据来源于试验室环境，仅供参考，贵公司如需最新数据或有特殊需求，欢迎联系搏业液压工程师。
The sample data comes from the laboratory environment and is only for reference. If your company needs the latest data or has special needs, please contact Boye hydraulic engineer.

插装阀用线圈

Coil for cartridge valve

BYC06-22-01D

DC 12V
DC 24V
其它规格可定做
Other can be customized

比例型
proportional type

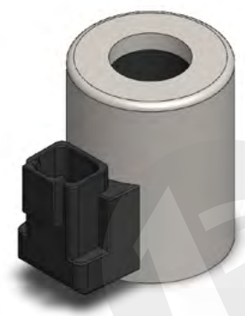

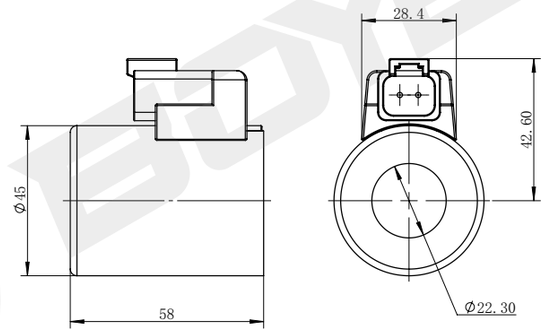

技术参数 /technical parameter					
环境温度 Ambienttemperature	°C	-25~50	防护等级 Degree of protection		IP67
电压波动范围 Voltage fluctuation range	%	85~110	通电持续率 Power on duration	%	100
额定功率 Rated power	W	40	绝缘等级 Insulation class		H（180）

BYC07-13-01L

DC 24V
AC 220V
其它规格可定做
Other can be customized

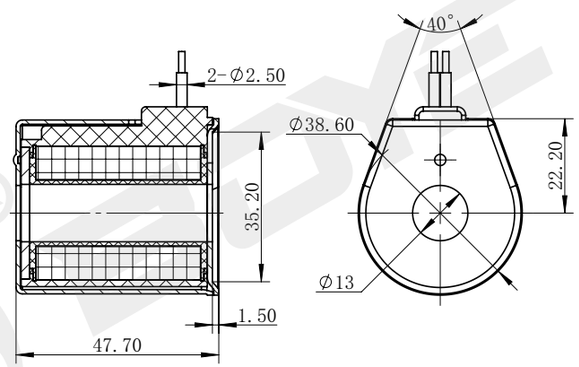

技术参数 /technical parameter					
环境温度 Ambienttemperature	°C	-25~50	防护等级 Degree of protection		IP67
电压波动范围 Voltage fluctuation range	%	85~110	通电持续率 Power on duration	%	100
额定功率 Rated power	W	20	绝缘等级 Insulation class		H（180）

样本数据来源于试验室环境，仅供参考，贵公司如需最新数据或有特殊需求，欢迎联系搏业液压工程师。
The sample data comes from the laboratory environment and is only for reference. If your company needs the latest data or has special needs, please contact Boye hydraulic engineer.

插装阀用线圈

Coil for cartridge valve

BYC07-13A-01L

DC 24V
AC 220V
其它规格可定做
Other can be customized

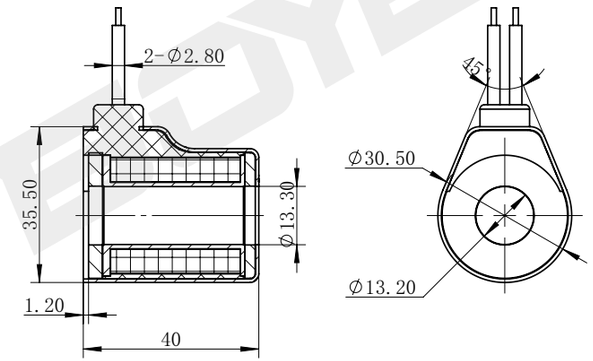

技术参数 /technical parameter					
环境温度 Ambienttemperature	°C	-25~50	防护等级 Degree of protection		IP67
电压波动范围 Voltage fluctuation range	%	85~110	通电持续率 Power on duration	%	100
额定功率 Rated power	W	20	绝缘等级 Insulation class		H（180）

BYC07-13A-01LD

DC 24V
AC 220V
其它规格可定做
Other can be customized

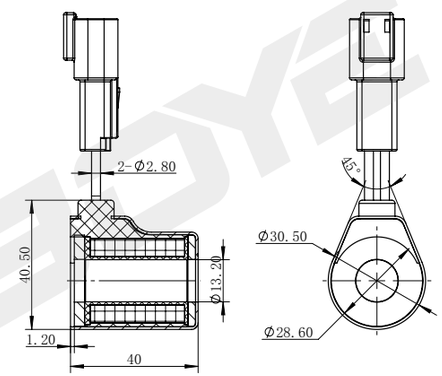

技术参数 /technical parameter					
环境温度 Ambienttemperature	°C	-25~50	防护等级 Degree of protection		IP67
电压波动范围 Voltage fluctuation range	%	85~110	通电持续率 Power on duration	%	100
额定功率 Rated power	W	20	绝缘等级 Insulation class		H（180）

样本数据来源于试验室环境，仅供参考，贵公司如需最新数据或有特殊需求，欢迎联系搏业液压工程师。
The sample data comes from the laboratory environment and is only for reference. If your company needs the latest data or has special needs, please contact Boye hydraulic engineer.

TEL:0574-86587131 www.nbboye.net

插装阀用线圈

Coil for cartridge valve

BYC08-10-01L

DC 24V
AC 220V
其它规格可定做
Other can be customized

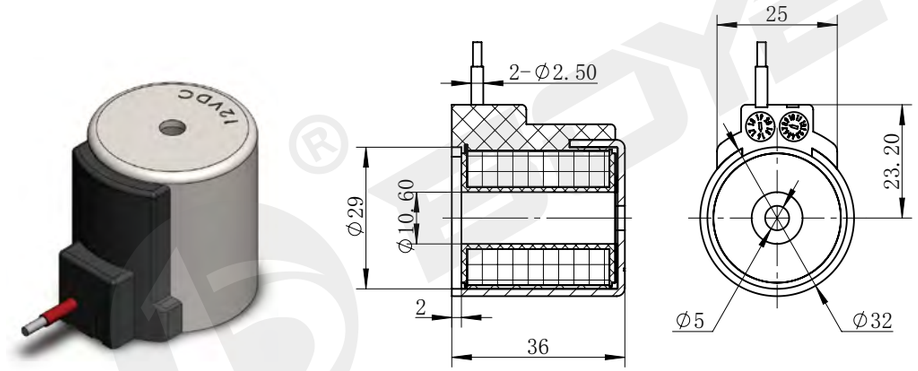

技术参数 /technical parameter					
环境温度 Ambienttemperature	℃	-25~50	防护等级 Degree of protection		IP67
电压波动范围 Voltage fluctuation range	%	85~110	通电持续率 Power on duration	%	100
额定功率 Rated power	W	18	绝缘等级 Insulation class		H（180）

BYC09-13-01L

DC 24V
AC 220V
其它规格可定做
Other can be customized

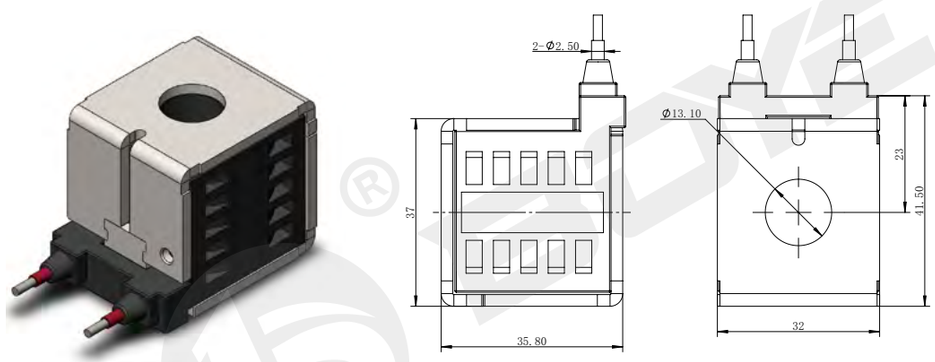

技术参数 /technical parameter					
环境温度 Ambienttemperature	℃	-25~50	防护等级 Degree of protection		IP67
电压波动范围 Voltage fluctuation range	%	85~110	通电持续率 Power on duration	%	100
额定功率 Rated power	W	16	绝缘等级 Insulation class		H（180）

样本数据来源于试验室环境，仅供参考，贵公司如需最新数据或有特殊需求，欢迎联系搏业液压工程师。
The sample data comes from the laboratory environment and is only for reference. If your company needs the latest data or has special needs, please contact Boye hydraulic engineer.

插装阀用线圈

Coil for cartridge valve

BYC10-13-01L

DC 24V
AC 220V
其它规格可定做
Other can be customized

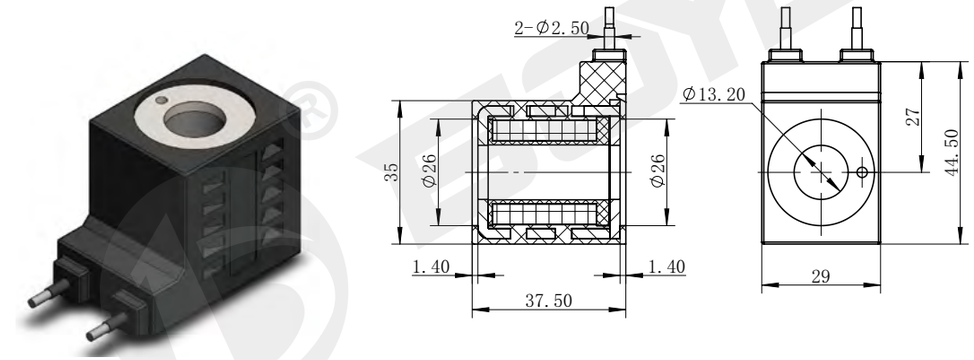

技术参数 /technical parameter					
环境温度 Ambienttemperature	℃	-25~50	防护等级 Degree of protection		IP67
电压波动范围 Voltage fluctuation range	%	85~110	通电持续率 Power on duration	%	100
额定功率 Rated power	W	16	绝缘等级 Insulation class		H（180）

BYC10-13-01S

DC 24V
AC 220V
其它规格可定做
Other can be customized

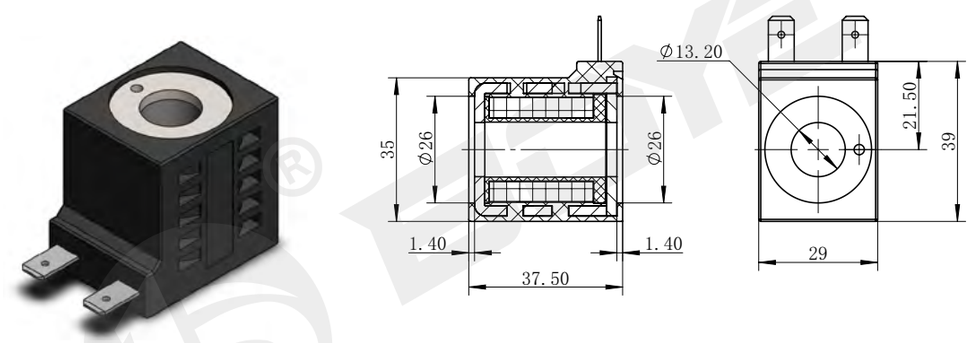

技术参数 /technical parameter					
环境温度 Ambienttemperature	℃	-25~50	防护等级 Degree of protection		IP65
电压波动范围 Voltage fluctuation range	%	85~110	通电持续率 Power on duration	%	100
额定功率 Rated power	W	16	绝缘等级 Insulation class		H（180）

样本数据来源于试验室环境，仅供参考，贵公司如需最新数据或有特殊需求，欢迎联系搏业液压工程师。
The sample data comes from the laboratory environment and is only for reference. If your company needs the latest data or has special needs, please contact Boye hydraulic engineer.

插装阀用线圈

Coil for cartridge valve

BYC10-13-01D

DC 12V
DC 24V
其它规格可定做
Other can be customized

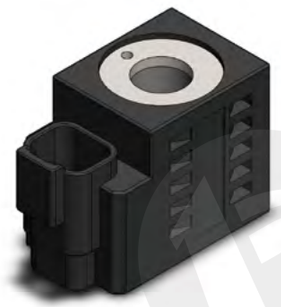

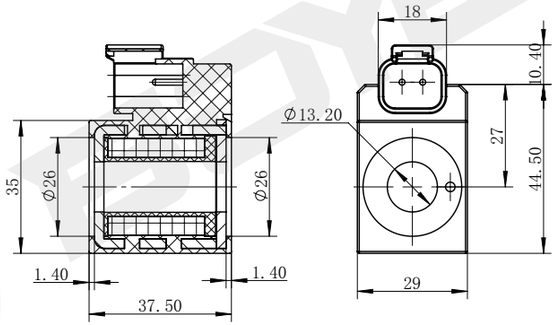

技术参数 /technical parameter					
环境温度 Ambienttemperature	°C	-25~50	防护等级 Degree of protection		IP67
电压波动范围 Voltage fluctuation range	%	85~110	通电持续率 Power on duration	%	100
额定功率 Rated power	W	16	绝缘等级 Insulation class		H（180）

BYC10-13-01L1

DC 24V
AC 220V
其它规格可定做
Other can be customized

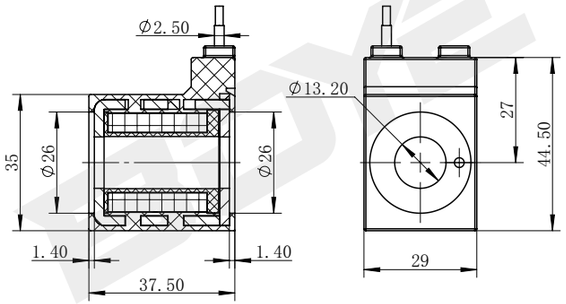

技术参数 /technical parameter					
环境温度 Ambienttemperature	°C	-25~50	防护等级 Degree of protection		IP67
电压波动范围 Voltage fluctuation range	%	85~110	通电持续率 Power on duration	%	100
额定功率 Rated power	W	16	绝缘等级 Insulation class		H（180）

样本数据来源于试验室环境，仅供参考，贵公司如需最新数据或有特殊需求，欢迎联系搏业液压工程师。
The sample data comes from the laboratory environment and is only for reference. If your company needs the latest data or has special needs, please contact Boye hydraulic engineer.

插装阀用线圈

Coil for cartridge valve

BYC12-13-01D

DC 12V
DC 24V
其它规格可定做
Other can be customized

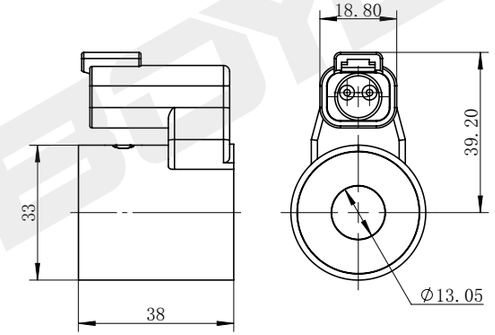

技术参数 /technical parameter					
环境温度 Ambienttemperature	°C	-25~50	防护等级 Degree of protection		IP67
电压波动范围 Voltage fluctuation range	%	85~110	通电持续率 Power on duration	%	100
额定功率 Rated power	W	20	绝缘等级 Insulation class		H（180）

BYC12-13-01G

DC 24V
AC 220V
其它规格可定做
Other can be customized

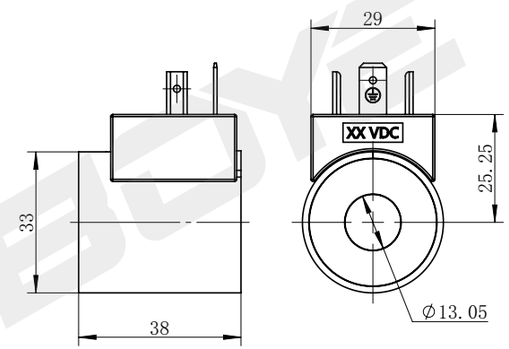

技术参数 /technical parameter					
环境温度 Ambienttemperature	°C	-25~50	防护等级 Degree of protection		IP65
电压波动范围 Voltage fluctuation range	%	85~110	通电持续率 Power on duration	%	100
额定功率 Rated power	W	20	绝缘等级 Insulation class		H（180）

样本数据来源于试验室环境，仅供参考，贵公司如需最新数据或有特殊需求，欢迎联系搏业液压工程师。
The sample data comes from the laboratory environment and is only for reference. If your company needs the latest data or has special needs, please contact Boye hydraulic engineer.

插装阀用线圈
Coil for cartridge valve

BYC12-13-01J

DC 12V
DC 24V
其它规格可定做
Other can be customized

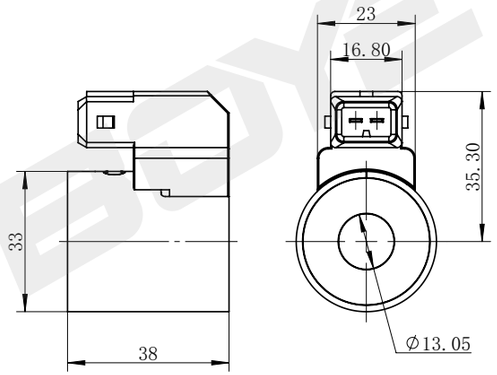

技术参数 /technical parameter					
环境温度 Ambienttemperature	°C	-25~50	防护等级 Degree of protection		IP67
电压波动范围 Voltage fluctuation range	%	85~110	通电持续率 Power on duration	%	100
额定功率 Rated power	W	20	绝缘等级 Insulation class		H（180）

BYC12-19-01D

DC 12V
DC 24V
其它规格可定做
Other can be customized

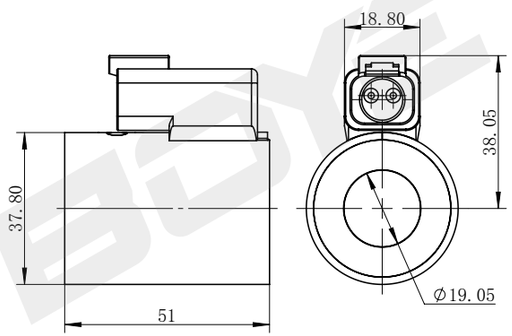

技术参数 /technical parameter					
环境温度 Ambienttemperature	°C	-25~50	防护等级 Degree of protection		IP67
电压波动范围 Voltage fluctuation range	%	85~110	通电持续率 Power on duration	%	100
额定功率 Rated power	W	24/36	绝缘等级 Insulation class		H（180）

样本数据来源于试验室环境，仅供参考，贵公司如需最新数据或有特殊需求，欢迎联系搏业液压工程师。
The sample data comes from the laboratory environment and is only for reference. If your company needs the latest data or has special needs, please contact Boye hydraulic engineer.

插装阀用线圈
Coil for cartridge valve

BYC12-19-01G

DC 24V
AC 220V
其它规格可定做
Other can be customized

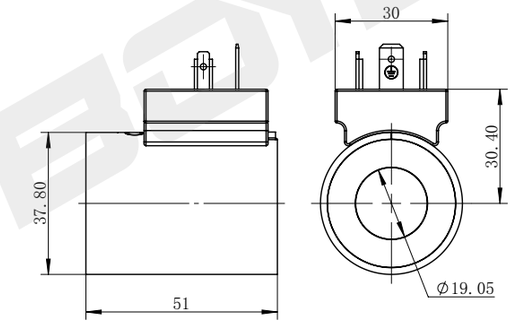

技术参数 /technical parameter					
环境温度 Ambienttemperature	°C	-25~50	防护等级 Degree of protection		IP65
电压波动范围 Voltage fluctuation range	%	85~110	通电持续率 Power on duration	%	100
额定功率 Rated power	W	24/36	绝缘等级 Insulation class		H（180）

BYC12-19-01J

DC 12V
DC 24V
其它规格可定做
Other can be customized

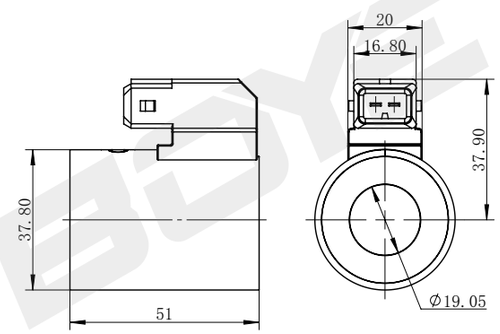

技术参数 /technical parameter					
环境温度 Ambienttemperature	°C	-25~50	防护等级 Degree of protection		IP67
电压波动范围 Voltage fluctuation range	%	85~110	通电持续率 Power on duration	%	100
额定功率 Rated power	W	24/36	绝缘等级 Insulation class		H（180）

样本数据来源于试验室环境，仅供参考，贵公司如需最新数据或有特殊需求，欢迎联系搏业液压工程师。
The sample data comes from the laboratory environment and is only for reference. If your company needs the latest data or has special needs, please contact Boye hydraulic engineer.

TEL:0574-86587131 www.nbboye.net

插装阀用线圈

Coil for cartridge valve

BYC14-13-01L

DC 24V
AC 220V
其它规格可定做
Other can be customized

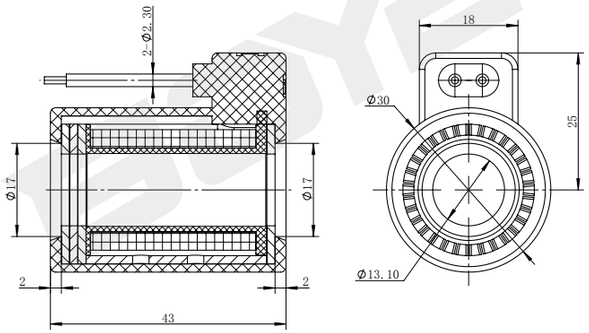

技术参数 /technical parameter					
环境温度 Ambienttemperature	°C	-25~50	防护等级 Degree of protection		IP67
电压波动范围 Voltage fluctuation range	%	85~110	通电持续率 Power on duration	%	100
额定功率 Rated power	W	19	绝缘等级 Insulation class		H（180）

BYC14-13-01LD

DC 24V
AC 220V
其它规格可定做
Other can be customized

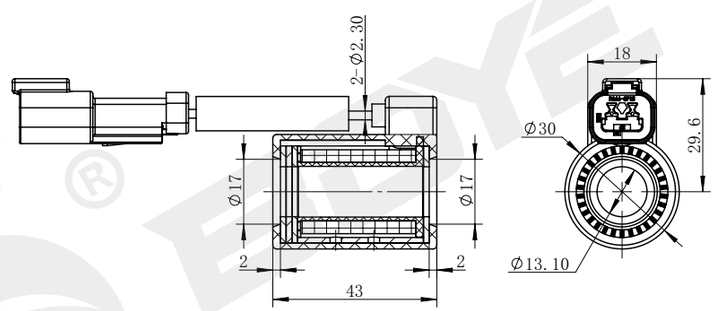

技术参数 /technical parameter					
环境温度 Ambienttemperature	°C	-25~50	防护等级 Degree of protection		IP67
电压波动范围 Voltage fluctuation range	%	85~110	通电持续率 Power on duration	%	100
额定功率 Rated power	W	19	绝缘等级 Insulation class		H（180）

样本数据来源于试验室环境，仅供参考，贵公司如需最新数据或有特殊需求，欢迎联系搏业液压工程师。
The sample data comes from the laboratory environment and is only for reference. If your company needs the latest data or has special needs, please contact Boye hydraulic engineer.

插装阀用线圈

Coil for cartridge valve

BYC13-10-01Q

DC 12V
DC 24V
其它规格可定做
Other can be customized

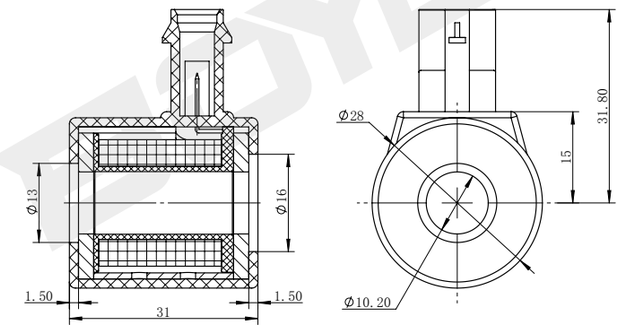

技术参数 /technical parameter					
环境温度 Ambienttemperature	°C	-25~50	防护等级 Degree of protection		IP67
电压波动范围 Voltage fluctuation range	%	85~110	通电持续率 Power on duration	%	100
额定功率 Rated power	W	17	绝缘等级 Insulation class		H（180）

BYC18-13-01L

DC 24V
AC 220V
其它规格可定做
Other can be customized

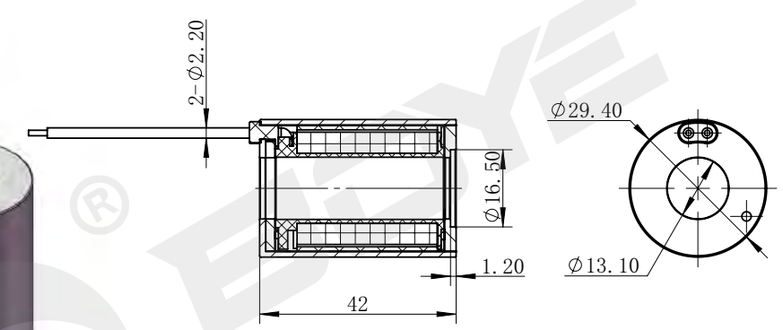

技术参数 /technical parameter					
环境温度 Ambienttemperature	°C	-25~50	防护等级 Degree of protection		IP67
电压波动范围 Voltage fluctuation range	%	85~110	通电持续率 Power on duration	%	100
额定功率 Rated power	W	20	绝缘等级 Insulation class		H（180）

样本数据来源于试验室环境，仅供参考，贵公司如需最新数据或有特殊需求，欢迎联系搏业液压工程师。
The sample data comes from the laboratory environment and is only for reference. If your company needs the latest data or has special needs, please contact Boye hydraulic engineer.

插装阀用线圈
Coil for cartridge valve

DC 12V
DC 24V
其它规格可定做
Other can be customized

BYC16-23-01D

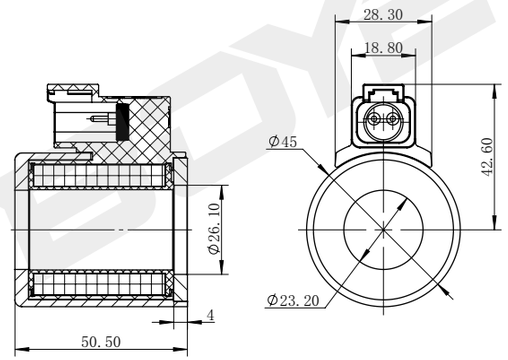

技术参数 /technical parameter					
环境温度 Ambienttemperature	°C	-25~50	防护等级 Degree of protection		IP67
电压波动范围 Voltage fluctuation range	%	85~110	通电持续率 Power on duration	%	100
额定功率 Rated power	W	30	绝缘等级 Insulation class		H（180）

DC 24V
AC 220V
其它规格可定做
Other can be customized

BYC16-23-01G

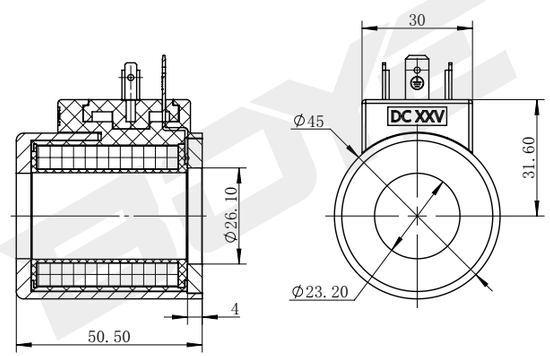

技术参数 /technical parameter					
环境温度 Ambienttemperature	°C	-25~50	防护等级 Degree of protection		IP65
电压波动范围 Voltage fluctuation range	%	85~110	通电持续率 Power on duration	%	100
额定功率 Rated power	W	30	绝缘等级 Insulation class		H（180）

样本数据来源于试验室环境，仅供参考，贵公司如需最新数据或有特殊需求，欢迎联系搏业液压工程师。
The sample data comes from the laboratory environment and is only for reference. If your company needs the latest data or has special needs, please contact Boye hydraulic engineer.

比例阀用线圈
Coil for proportional valve

DC 12V
DC 24V
其它规格可定做
Other can be customized

BYG05-45-01D

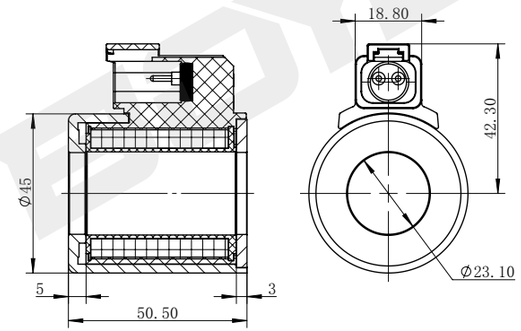

技术参数 /technical parameter					
环境温度 Ambienttemperature	°C	-25~50	防护等级 Degree of protection		IP67
电压波动范围 Voltage fluctuation range	%	85~110	通电持续率 Power on duration	%	100
额定功率 Rated power	W	55	绝缘等级 Insulation class		H（180）

DC 12V
DC 24V
其它规格可定做
Other can be customized

BYG05-45-01G

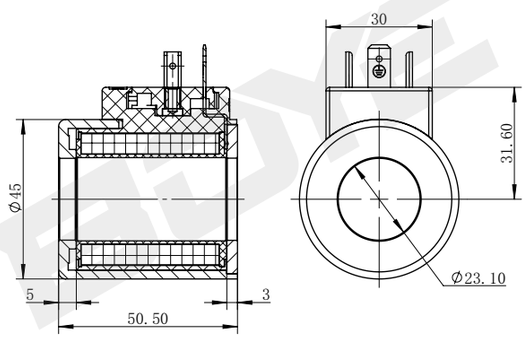

技术参数 /technical parameter					
环境温度 Ambienttemperature	°C	-25~50	防护等级 Degree of protection		IP65
电压波动范围 Voltage fluctuation range	%	85~110	通电持续率 Power on duration	%	100
额定功率 Rated power	W	55	绝缘等级 Insulation class		H（180）

样本数据来源于试验室环境，仅供参考，贵公司如需最新数据或有特殊需求，欢迎联系搏业液压工程师。
The sample data comes from the laboratory environment and is only for reference. If your company needs the latest data or has special needs, please contact Boye hydraulic engineer.

TEL:0574-86587131 www.nbboye.net

比例阀用线圈
Coil for proportional valve

DC 12V
DC 24V
其它规格可定做
Other can be customized

BYG05-45-01J

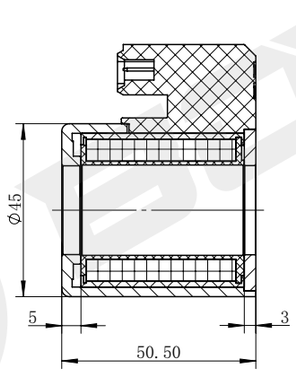

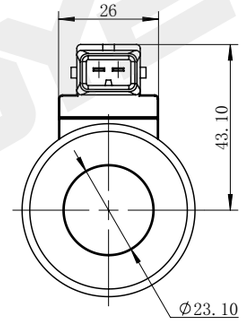

技术参数 /technical parameter					
环境温度 Ambienttemperature	°C	-25~50	防护等级 Degree of protection		IP67
电压波动范围 Voltage fluctuation range	%	85~110	通电持续率 Power on duration	%	100
额定功率 Rated power	W	55	绝缘等级 Insulation class		H（180）

DC 12V
DC 24V
其它规格可定做
Other can be customized

BYG06-45-01D

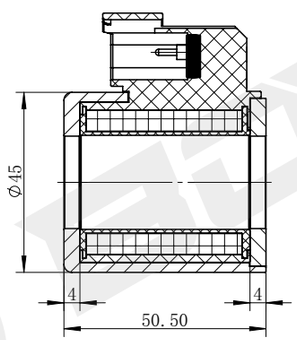

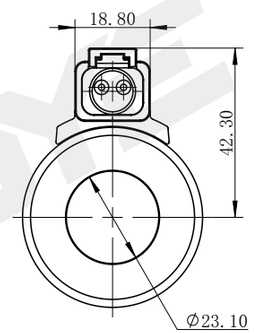

技术参数 /technical parameter					
环境温度 Ambienttemperature	°C	-25~50	防护等级 Degree of protection		IP67
电压波动范围 Voltage fluctuation range	%	85~110	通电持续率 Power on duration	%	100
额定功率 Rated power	W	28/30/36	绝缘等级 Insulation class		H（180）

样本数据来源于试验室环境，仅供参考，贵公司如需最新数据或有特殊需求，欢迎联系搏业液压工程师。
The sample data comes from the laboratory environment and is only for reference. If your company needs the latest data or has special needs, please contact Boye hydraulic engineer.

比例阀用线圈
Coil for proportional valve

DC 24V
AC 220V
其它规格可定做
Other can be customized

BYG06-45-01G

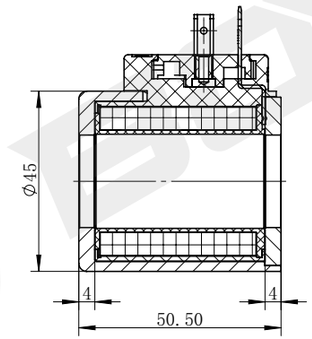

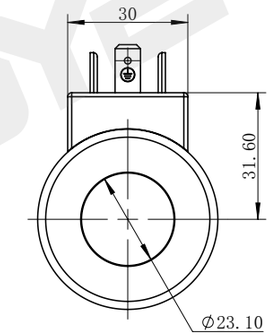

技术参数 /technical parameter					
环境温度 Ambienttemperature	°C	-25~50	防护等级 Degree of protection		IP65
电压波动范围 Voltage fluctuation range	%	85~110	通电持续率 Power on duration	%	100
额定功率 Rated power	W	28/30/36	绝缘等级 Insulation class		H（180）

DC 12V
DC 24V
其它规格可定做
Other can be customized

BYG06-45-01J

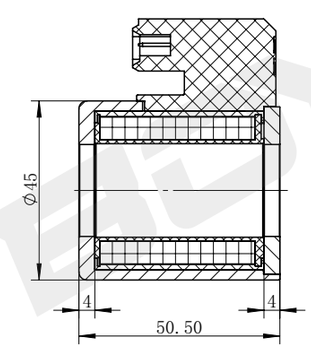

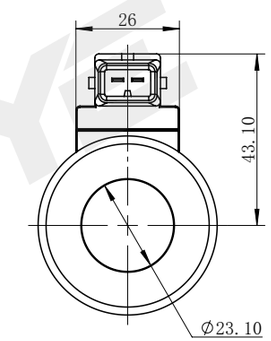

技术参数 /technical parameter					
环境温度 Ambienttemperature	°C	-25~50	防护等级 Degree of protection		IP67
电压波动范围 Voltage fluctuation range	%	85~110	通电持续率 Power on duration	%	100
额定功率 Rated power	W	28/30/36	绝缘等级 Insulation class		H（180）

样本数据来源于试验室环境，仅供参考，贵公司如需最新数据或有特殊需求，欢迎联系搏业液压工程师。
The sample data comes from the laboratory environment and is only for reference. If your company needs the latest data or has special needs, please contact Boye hydraulic engineer.

TEL:0574-86587131 www.nbboye.net

直流阀用线圈
DC coil for valves

BYZ03-13-01G

DC 24V
AC 220V
其它规格可定做
Other can be customized

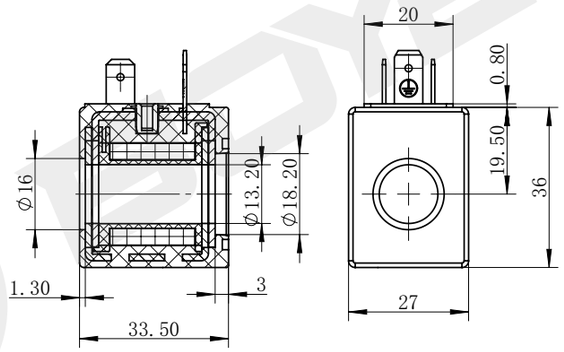

技术参数 /technical parameter					
环境温度 Ambienttemperature	°C	-25~50	防护等级 Degree of protection		IP65
电压波动范围 Voltage fluctuation range	%	85~110	通电持续率 Power on duration	%	100
额定功率 Rated power	W	25	绝缘等级 Insulation class		H（180）

BYZ03-16-01G

DC 24V
AC 220V
其它规格可定做
Other can be customized

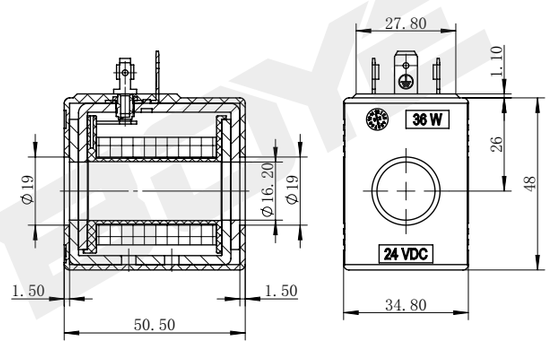

技术参数 /technical parameter					
环境温度 Ambienttemperature	°C	-25~50	防护等级 Degree of protection		IP65
电压波动范围 Voltage fluctuation range	%	85~110	通电持续率 Power on duration	%	100
额定功率 Rated power	W	18/36	绝缘等级 Insulation class		H（180）

样本数据来源于试验室环境，仅供参考，贵公司如需最新数据或有特殊需求，欢迎联系搏业液压工程师。
The sample data comes from the laboratory environment and is only for reference. If your company needs the latest data or has special needs, please contact Boye hydraulic engineer.

直流阀用线圈
DC coil for valves

BYZ04-25-01D

DC 12V
DC 24V
其它规格可定做
Other can be customized

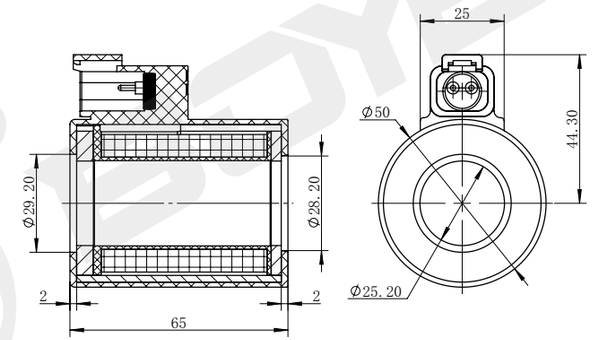

技术参数 /technical parameter					
环境温度 Ambienttemperature	°C	-25~50	防护等级 Degree of protection		IP67
电压波动范围 Voltage fluctuation range	%	85~110	通电持续率 Power on duration	%	100
额定功率 Rated power	W	38	绝缘等级 Insulation class		H（180）

BYZ08-30-01G

DC 24V
AC 220V
其它规格可定做
Other can be customized

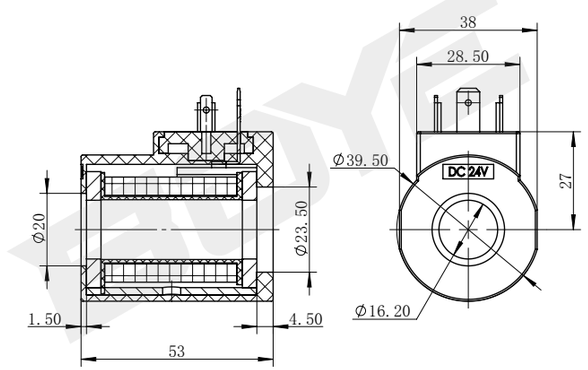

技术参数 /technical parameter					
环境温度 Ambienttemperature	°C	-25~50	防护等级 Degree of protection		IP67
电压波动范围 Voltage fluctuation range	%	85~110	通电持续率 Power on duration	%	100
额定功率 Rated power	W	28	绝缘等级 Insulation class		H（180）

样本数据来源于试验室环境，仅供参考，贵公司如需最新数据或有特殊需求，欢迎联系搏业液压工程师。
The sample data comes from the laboratory environment and is only for reference. If your company needs the latest data or has special needs, please contact Boye hydraulic engineer.

TEL:0574-86587131 www.nbboye.net

直流阀用线圈
DC coil for valves

BYZ09-15-01G

DC 24V
AC 220V
其它规格可定做
Other can be customized

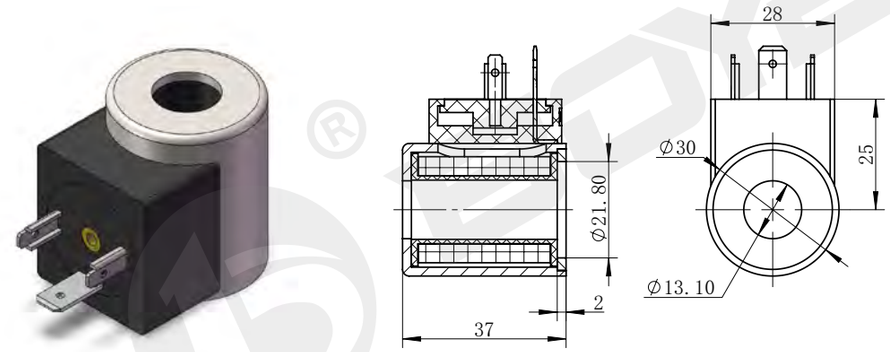

技术参数 /technical parameter					
环境温度 Ambienttemperature	°C	-25~50	防护等级 Degree of protection		IP65
电压波动范围 Voltage fluctuation range	%	85~110	通电持续率 Power on duration	%	100
额定功率 Rated power	W	30	绝缘等级 Insulation class		H（180）

BYZ09-15-02G

DC 24V
AC 220V
其它规格可定做
Other can be customized

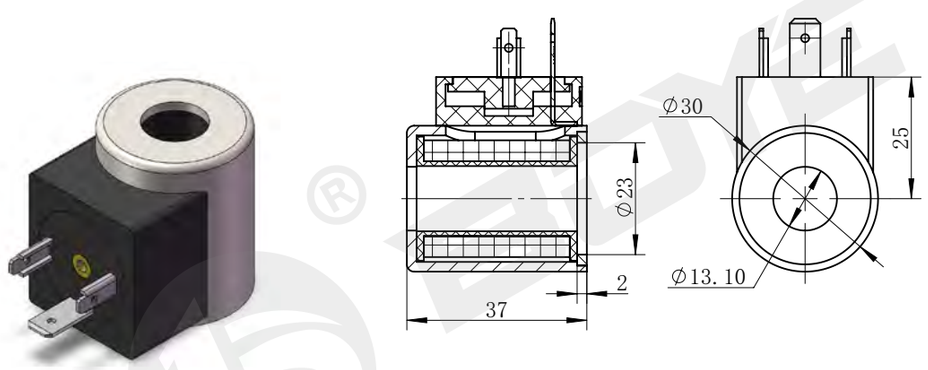

技术参数 /technical parameter					
环境温度 Ambienttemperature	°C	-25~50	防护等级 Degree of protection		IP65
电压波动范围 Voltage fluctuation range	%	85~110	通电持续率 Power on duration	%	100
额定功率 Rated power	W	16/30	绝缘等级 Insulation class		H（180）

样本数据来源于试验室环境，仅供参考，贵公司如需最新数据或有特殊需求，欢迎联系搏业液压工程师。
The sample data comes from the laboratory environment and is only for reference. If your company needs the latest data or has special needs, please contact Boye hydraulic engineer.

直流阀用线圈
DC coil for valves

BYZ09-15-03L

DC 24V
AC 220V
其它规格可定做
Other can be customized

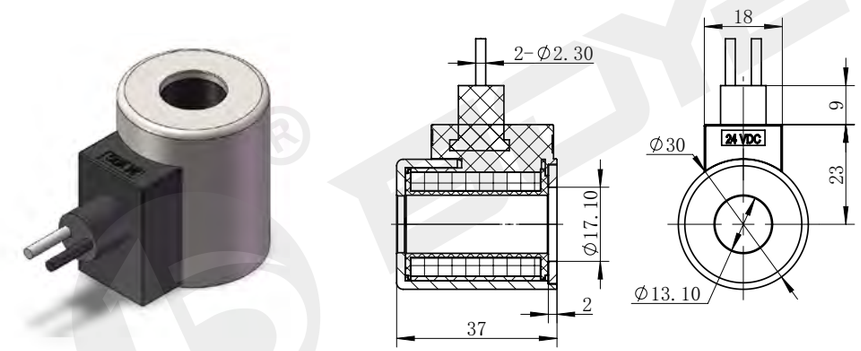

技术参数 /technical parameter					
环境温度 Ambienttemperature	°C	-25~50	防护等级 Degree of protection		IP67
电压波动范围 Voltage fluctuation range	%	85~110	通电持续率 Power on duration	%	100
额定功率 Rated power	W	16/30	绝缘等级 Insulation class		H（180）

BYZ09-15-04D

DC 12V
DC 24V
其它规格可定做
Other can be customized

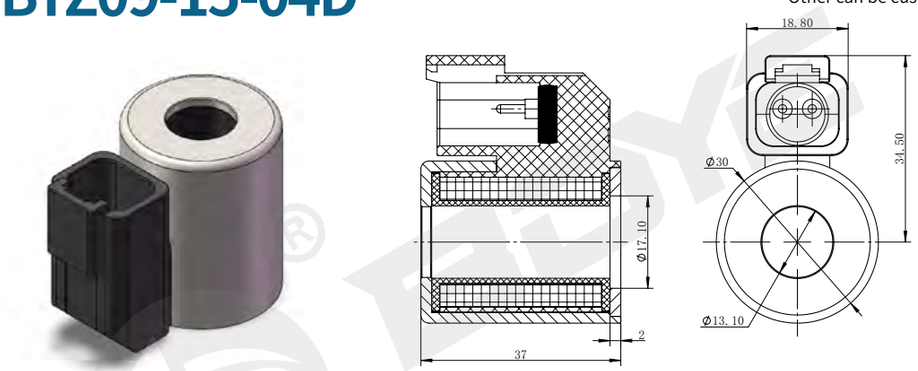

技术参数 /technical parameter					
环境温度 Ambienttemperature	°C	-25~50	防护等级 Degree of protection		IP67
电压波动范围 Voltage fluctuation range	%	85~110	通电持续率 Power on duration	%	100
额定功率 Rated power	W	16/30	绝缘等级 Insulation class		H（180）

样本数据来源于试验室环境，仅供参考，贵公司如需最新数据或有特殊需求，欢迎联系搏业液压工程师。
The sample data comes from the laboratory environment and is only for reference. If your company needs the latest data or has special needs, please contact Boye hydraulic engineer.

直流阀用线圈
DC coil for valves

BYZ09-20-01G

DC 24V
AC 220V
其它规格可定做
Other can be customized

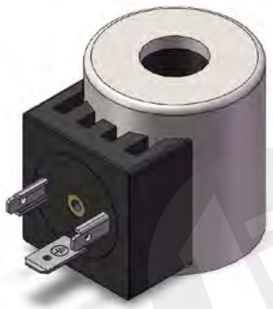

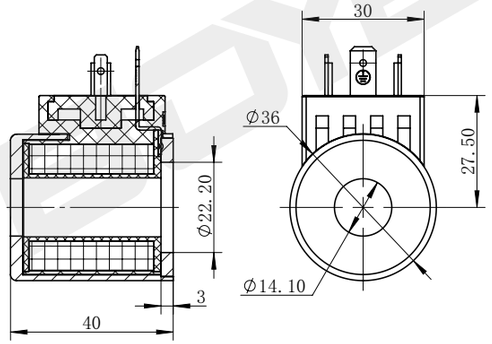

技术参数 /technical parameter					
环境温度 Ambienttemperature	°C	-25~50	防护等级 Degree of protection		IP65
电压波动范围 Voltage fluctuation range	%	85~110	通电持续率 Power on duration	%	100
额定功率 Rated power	W	25	绝缘等级 Insulation class		H（180）

BYZ09-20-01L

DC 24V
AC 220V
其它规格可定做
Other can be customized

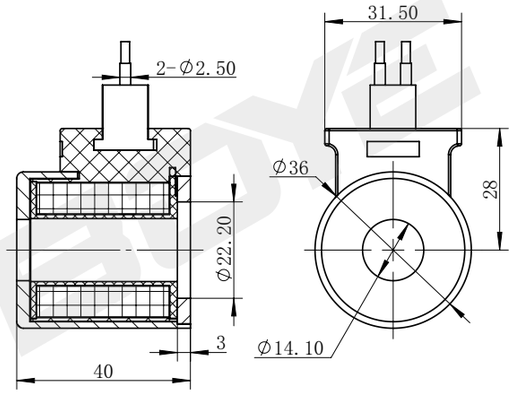

技术参数 /technical parameter					
环境温度 Ambienttemperature	°C	-25~50	防护等级 Degree of protection		IP67
电压波动范围 Voltage fluctuation range	%	85~110	通电持续率 Power on duration	%	100
额定功率 Rated power	W	25	绝缘等级 Insulation class		H（180）

样本数据来源于试验室环境，仅供参考，贵公司如需最新数据或有特殊需求，欢迎联系搏业液压工程师。
The sample data comes from the laboratory environment and is only for reference. If your company needs the latest data or has special needs, please contact Boye hydraulic engineer.

直流阀用线圈
DC coil for valves

BYZ09-25-01G

DC 24V
AC 220V
其它规格可定做
Other can be customized

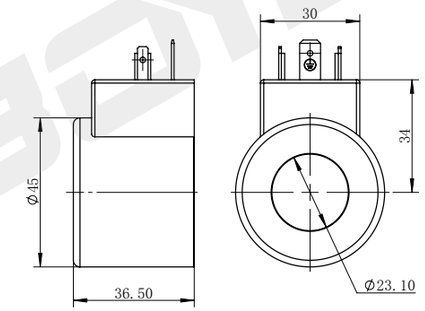

技术参数 /technical parameter					
环境温度 Ambienttemperature	°C	-25~50	防护等级 Degree of protection		IP65
电压波动范围 Voltage fluctuation range	%	85~110	通电持续率 Power on duration	%	100
额定功率 Rated power	W	25	绝缘等级 Insulation class		H（180）

BYZ09-30-01G

DC 24V
AC 220V
其它规格可定做
Other can be customized

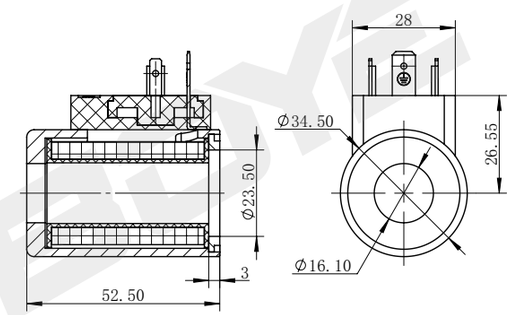

技术参数 /technical parameter					
环境温度 Ambienttemperature	°C	-25~50	防护等级 Degree of protection		IP65
电压波动范围 Voltage fluctuation range	%	85~110	通电持续率 Power on duration	%	100
额定功率 Rated power	W	25	绝缘等级 Insulation class		H（180）

样本数据来源于试验室环境，仅供参考，贵公司如需最新数据或有特殊需求，欢迎联系搏业液压工程师。
The sample data comes from the laboratory environment and is only for reference. If your company needs the latest data or has special needs, please contact Boye hydraulic engineer.

直流阀用线圈
DC coil for valves

BYZ09-50-01A

DC 24V
AC 220V
其它规格可定做
Other can be customized

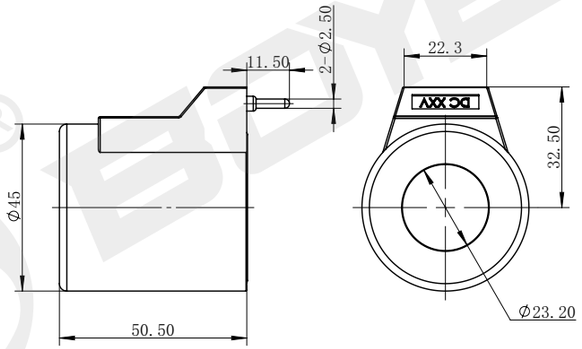

技术参数 /technical parameter					
环境温度 Ambienttemperature	°C	-25~50	防护等级 Degree of protection		IP65
电压波动范围 Voltage fluctuation range	%	85~110	通电持续率 Power on duration	%	100
额定功率 Rated power	W	30	绝缘等级 Insulation class		H（180）

BYZ09-50-01G

DC 24V
AC 220V
其它规格可定做
Other can be customized

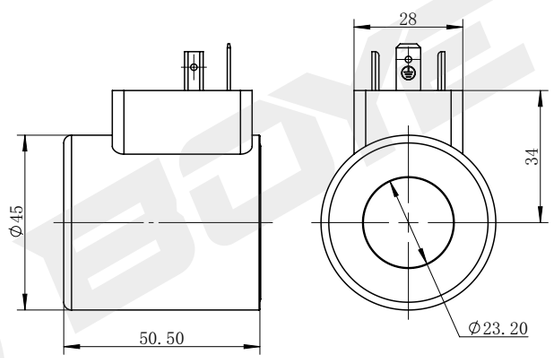

技术参数 /technical parameter					
环境温度 Ambienttemperature	°C	-25~50	防护等级 Degree of protection		IP65
电压波动范围 Voltage fluctuation range	%	85~110	通电持续率 Power on duration	%	100
额定功率 Rated power	W	30	绝缘等级 Insulation class		H（180）

样本数据来源于试验室环境，仅供参考，贵公司如需最新数据或有特殊需求，欢迎联系搏业液压工程师。
The sample data comes from the laboratory environment and is only for reference. If your company needs the latest data or has special needs, please contact Boye hydraulic engineer.

直流阀用线圈
DC coil for valves

BYZ09-50B-01D

DC 12V
DC 24V
其它规格可定做
Other can be customized

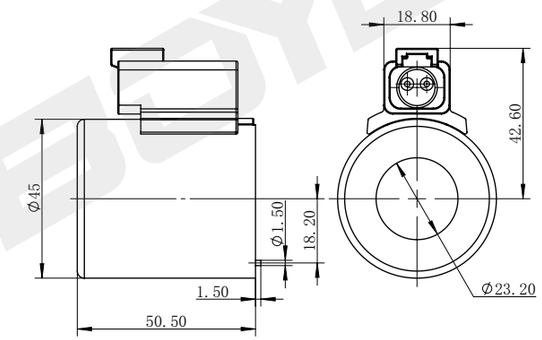

技术参数 /technical parameter					
环境温度 Ambienttemperature	°C	-25~50	防护等级 Degree of protection		IP67
电压波动范围 Voltage fluctuation range	%	85~110	通电持续率 Power on duration	%	100
额定功率 Rated power	W	30	绝缘等级 Insulation class		H（180）

BYZ09-50B-01G

DC 24V
AC 220V
其它规格可定做
Other can be customized

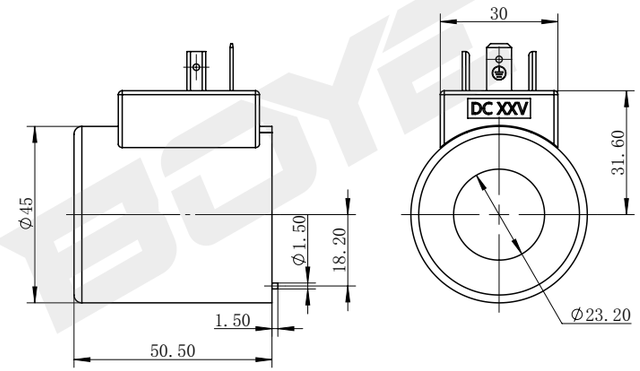

技术参数 /technical parameter					
环境温度 Ambienttemperature	°C	-25~50	防护等级 Degree of protection		IP65
电压波动范围 Voltage fluctuation range	%	85~110	通电持续率 Power on duration	%	100
额定功率 Rated power	W	30	绝缘等级 Insulation class		H（180）

样本数据来源于试验室环境，仅供参考，贵公司如需最新数据或有特殊需求，欢迎联系搏业液压工程师。
The sample data comes from the laboratory environment and is only for reference. If your company needs the latest data or has special needs, please contact Boye hydraulic engineer.

TEL:0574-86587131 www.nbboye.net

直流阀用线圈
DC coil for valves

BYZ09-50F-01D

DC 12V
DC 24V
其它规格可定做
Other can be customized

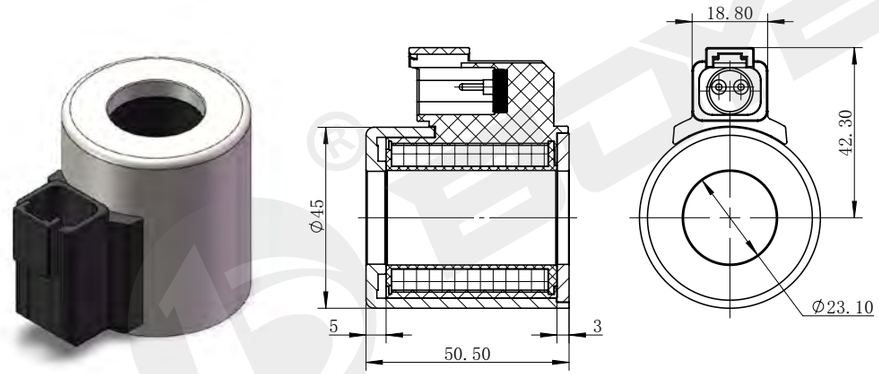

技术参数 /technical parameter					
环境温度 Ambienttemperature	°C	-25~50	防护等级 Degree of protection		IP67
电压波动范围 Voltage fluctuation range	%	85~110	通电持续率 Power on duration	%	100
额定功率 Rated power	W	30	绝缘等级 Insulation class		H（180）

BYZ09-50F-01G

DC 24V
AC 220V
其它规格可定做
Other can be customized

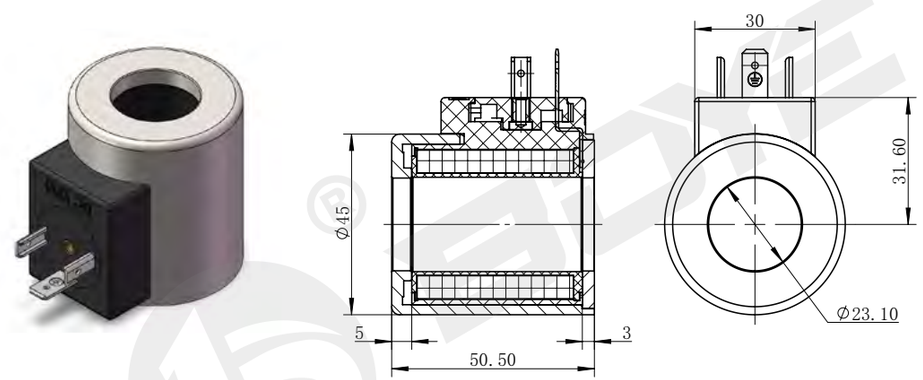

技术参数 /technical parameter					
环境温度 Ambienttemperature	°C	-25~50	防护等级 Degree of protection		IP65
电压波动范围 Voltage fluctuation range	%	85~110	通电持续率 Power on duration	%	100
额定功率 Rated power	W	30	绝缘等级 Insulation class		H（180）

样本数据来源于试验室环境，仅供参考，贵公司如需最新数据或有特殊需求，欢迎联系搏业液压工程师。
The sample data comes from the laboratory environment and is only for reference. If your company needs the latest data or has special needs, please contact Boye hydraulic engineer.

直流阀用线圈
DC coil for valves

BYZ09-50F-01J

DC 12V
DC 24V
其它规格可定做
Other can be customized

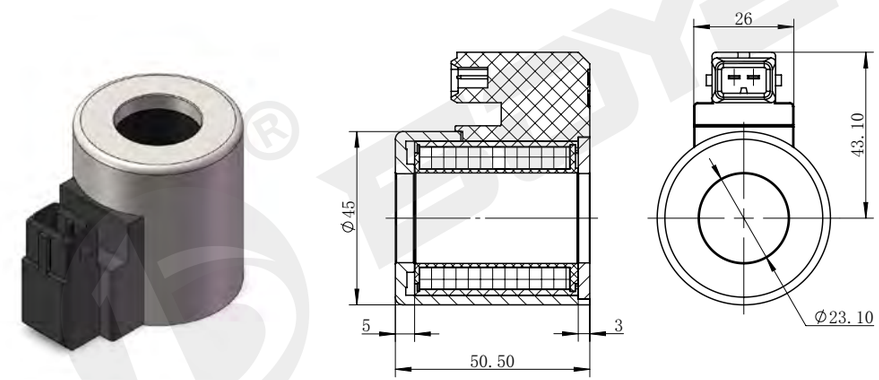

技术参数 /technical parameter					
环境温度 Ambienttemperature	°C	-25~50	防护等级 Degree of protection		IP67
电压波动范围 Voltage fluctuation range	%	85~110	通电持续率 Power on duration	%	100
额定功率 Rated power	W	30	绝缘等级 Insulation class		H（180）

BYZ09-50G-01D

DC 12V
DC 24V
其它规格可定做
Other can be customized

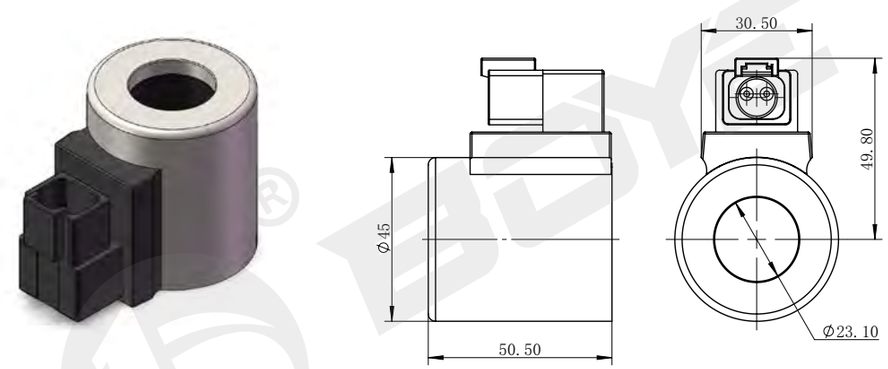

技术参数 /technical parameter					
环境温度 Ambienttemperature	°C	-25~50	防护等级 Degree of protection		IP67
电压波动范围 Voltage fluctuation range	%	85~110	通电持续率 Power on duration	%	100
额定功率 Rated power	W	30	绝缘等级 Insulation class		H（180）

样本数据来源于试验室环境，仅供参考，贵公司如需最新数据或有特殊需求，欢迎联系搏业液压工程师。
The sample data comes from the laboratory environment and is only for reference. If your company needs the latest data or has special needs, please contact Boye hydraulic engineer.

直流阀用线圈
DC coil for valves

BYZ09-50L-01G

DC 24V
AC 220V
其它规格可定做
Other can be customized

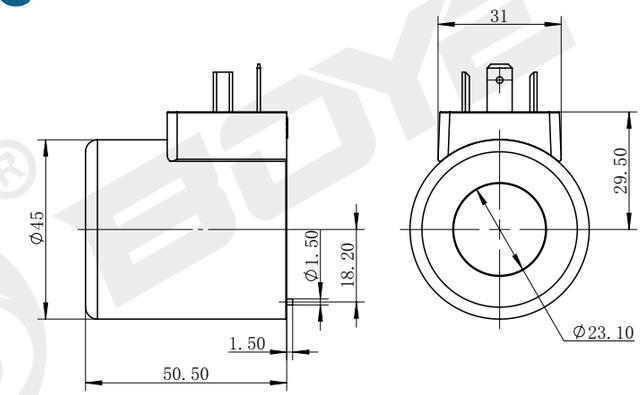

技术参数 /technical parameter					
环境温度 Ambienttemperature	°C	-25~50	防护等级 Degree of protection		IP65
电压波动范围 Voltage fluctuation range	%	85~110	通电持续率 Power on duration	%	100
额定功率 Rated power	W	30	绝缘等级 Insulation class		H（180）

BYZ09-60-01G

DC 24V
AC 220V
其它规格可定做
Other can be customized

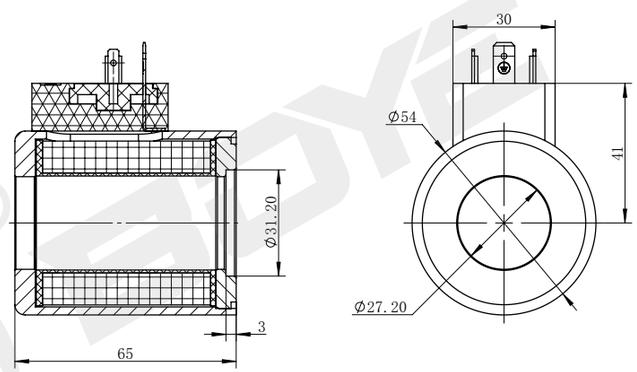

技术参数 /technical parameter					
环境温度 Ambienttemperature	°C	-25~50	防护等级 Degree of protection		IP65
电压波动范围 Voltage fluctuation range	%	85~110	通电持续率 Power on duration	%	100
额定功率 Rated power	W	35	绝缘等级 Insulation class		H（180）

样本数据来源于试验室环境，仅供参考，贵公司如需最新数据或有特殊需求，欢迎联系搏业液压工程师。
The sample data comes from the laboratory environment and is only for reference. If your company needs the latest data or has special needs, please contact Boye hydraulic engineer.

直流阀用线圈
DC coil for valves

BYZ09-120-01A

DC 24V
AC 220V
其它规格可定做
Other can be customized

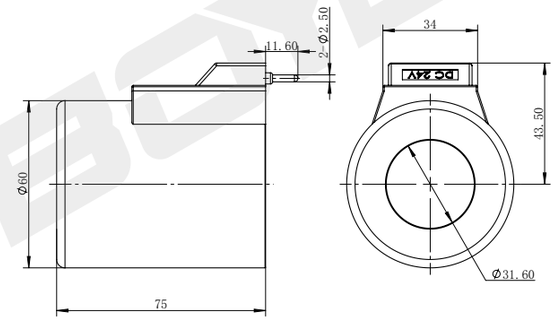

技术参数 /technical parameter					
环境温度 Ambienttemperature	°C	-25~50	防护等级 Degree of protection		IP65
电压波动范围 Voltage fluctuation range	%	85~110	通电持续率 Power on duration	%	100
额定功率 Rated power	W	40	绝缘等级 Insulation class		H（180）

BYZ09-120-01G

DC 24V
AC 220V
其它规格可定做
Other can be customized

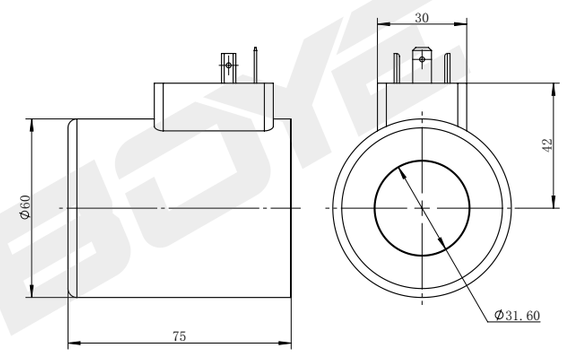

技术参数 /technical parameter					
环境温度 Ambienttemperature	°C	-25~50	防护等级 Degree of protection		IP65
电压波动范围 Voltage fluctuation range	%	85~110	通电持续率 Power on duration	%	100
额定功率 Rated power	W	40	绝缘等级 Insulation class		H（180）

样本数据来源于试验室环境，仅供参考，贵公司如需最新数据或有特殊需求，欢迎联系搏业液压工程师。
The sample data comes from the laboratory environment and is only for reference. If your company needs the latest data or has special needs, please contact Boye hydraulic engineer.

直流阀用线圈
DC coil for valves

BYZ09-120A-01D

DC 12V
DC 24V
其它规格可定做
Other can be customized

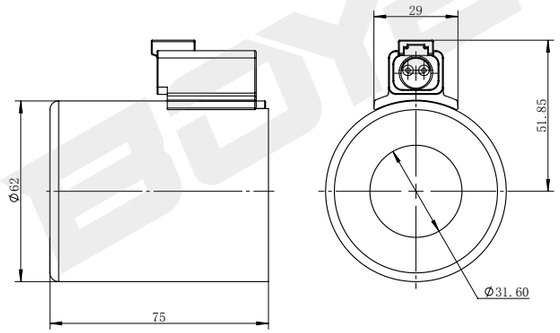

技术参数 /technical parameter					
环境温度 Ambienttemperature	°C	-25~50	防护等级 Degree of protection		IP67
电压波动范围 Voltage fluctuation range	%	85~110	通电持续率 Power on duration	%	100
额定功率 Rated power	W	40	绝缘等级 Insulation class		H（180）

BYZ09-120A-01G

DC 24V
AC 220V
其它规格可定做
Other can be customized

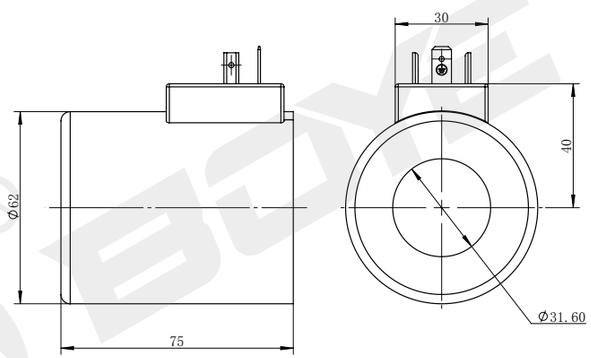

技术参数 /technical parameter					
环境温度 Ambienttemperature	°C	-25~50	防护等级 Degree of protection		IP65
电压波动范围 Voltage fluctuation range	%	85~110	通电持续率 Power on duration	%	100
额定功率 Rated power	W	40	绝缘等级 Insulation class		H（180）

样本数据来源于试验室环境，仅供参考，贵公司如需最新数据或有特殊需求，欢迎联系搏业液压工程师。
The sample data comes from the laboratory environment and is only for reference. If your company needs the latest data or has special needs, please contact Boye hydraulic engineer.

直流阀用线圈
DC coil for valves

BYZ09-120L-01D

DC 12V
DC 24V
其它规格可定做
Other can be customized

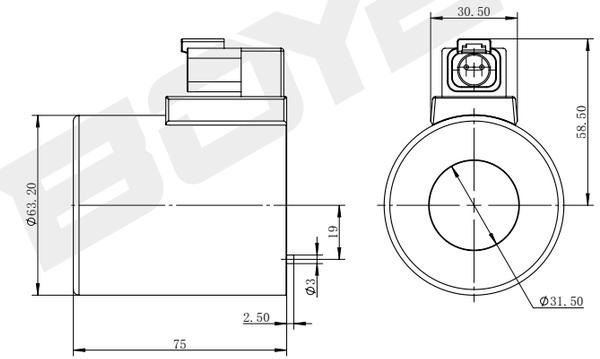

技术参数 /technical parameter					
环境温度 Ambienttemperature	°C	-25~50	防护等级 Degree of protection		IP67
电压波动范围 Voltage fluctuation range	%	85~110	通电持续率 Power on duration	%	100
额定功率 Rated power	W	40	绝缘等级 Insulation class		H（180）

BYZ09-120L-01G

DC 24V
AC 220V
其它规格可定做
Other can be customized

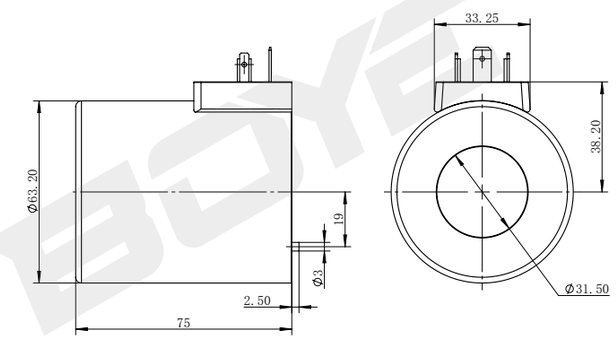

技术参数 /technical parameter					
环境温度 Ambienttemperature	°C	-25~50	防护等级 Degree of protection		IP65
电压波动范围 Voltage fluctuation range	%	85~110	通电持续率 Power on duration	%	100
额定功率 Rated power	W	40	绝缘等级 Insulation class		H（180）

样本数据来源于试验室环境，仅供参考，贵公司如需最新数据或有特殊需求，欢迎联系搏业液压工程师。
The sample data comes from the laboratory environment and is only for reference. If your company needs the latest data or has special needs, please contact Boye hydraulic engineer.

TEL:0574-86587131 www.nbboye.net

直流阀用线圈
DC coil for valves

DC 24V
AC 220V
其它规格可定做
Other can be customized

BYZ11-40-01A

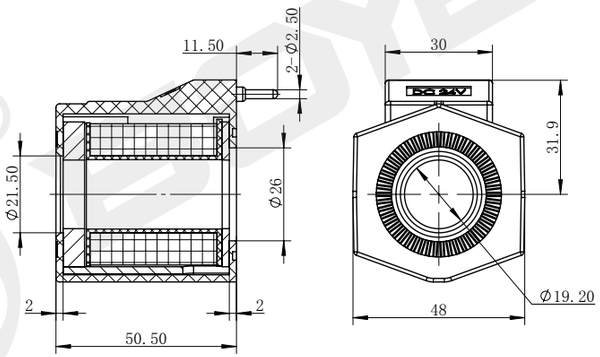

技术参数 /technical parameter					
环境温度 Ambienttemperature	°C	-25~50	防护等级 Degree of protection		IP65
电压波动范围 Voltage fluctuation range	%	85~110	通电持续率 Power on duration	%	100
额定功率 Rated power	W	30	绝缘等级 Insulation class		H（180）

DC 24V
AC 220V
其它规格可定做
Other can be customized

BYZ11-40-01G

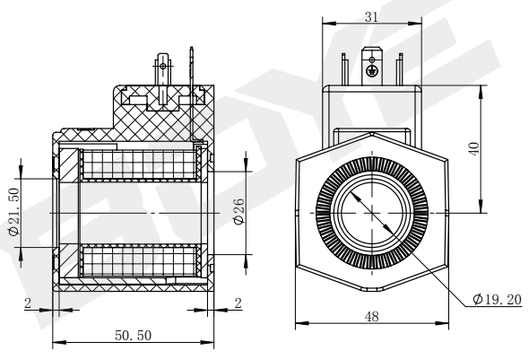

技术参数 /technical parameter					
环境温度 Ambienttemperature	°C	-25~50	防护等级 Degree of protection		IP65
电压波动范围 Voltage fluctuation range	%	85~110	通电持续率 Power on duration	%	100
额定功率 Rated power	W	30	绝缘等级 Insulation class		H（180）

样本数据来源于试验室环境，仅供参考，贵公司如需最新数据或有特殊需求，欢迎联系搏业液压工程师。
The sample data comes from the laboratory environment and is only for reference. If your company needs the latest data or has special needs, please contact Boye hydraulic engineer.

直流阀用线圈
DC coil for valves

DC 24V
AC 220V
其它规格可定做
Other can be customized

BYZ11-50-01A

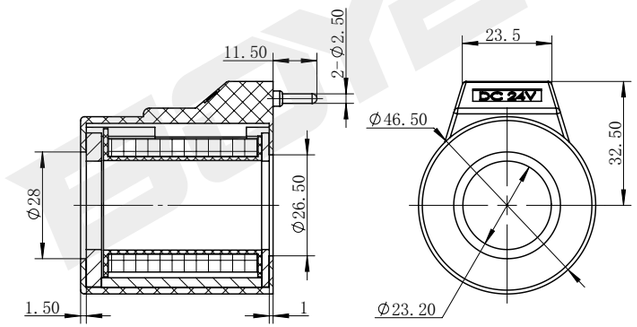

技术参数 /technical parameter					
环境温度 Ambienttemperature	°C	-25~50	防护等级 Degree of protection		IP65
电压波动范围 Voltage fluctuation range	%	85~110	通电持续率 Power on duration	%	100
额定功率 Rated power	W	30	绝缘等级 Insulation class		H（180）

DC 24V
AC 220V
其它规格可定做
Other can be customized

BYZ11-50-01G

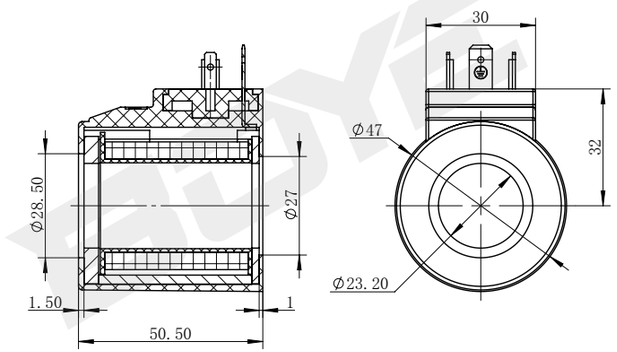

技术参数 /technical parameter					
环境温度 Ambienttemperature	°C	-25~50	防护等级 Degree of protection		IP65
电压波动范围 Voltage fluctuation range	%	85~110	通电持续率 Power on duration	%	100
额定功率 Rated power	W	30	绝缘等级 Insulation class		H（180）

样本数据来源于试验室环境，仅供参考，贵公司如需最新数据或有特殊需求，欢迎联系搏业液压工程师。
The sample data comes from the laboratory environment and is only for reference. If your company needs the latest data or has special needs, please contact Boye hydraulic engineer.

TEL:0574-86587131 www.nbboye.net

直流阀用线圈
DC coil for valves

DC 24V
AC 220V
其它规格可定做
Other can be customized

BYZ11-90-01A

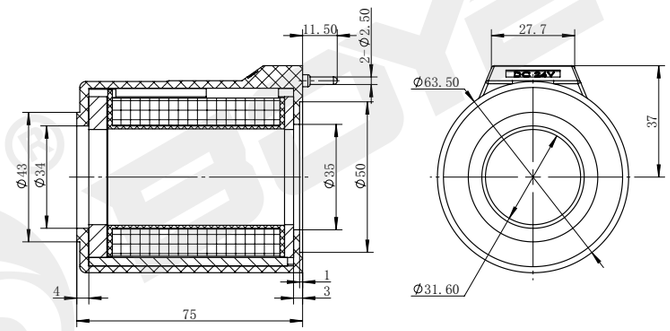

技术参数 /technical parameter					
环境温度 Ambienttemperature	°C	-25~50	防护等级 Degree of protection		IP65
电压波动范围 Voltage fluctuation range	%	85~110	通电持续率 Power on duration	%	100
额定功率 Rated power	W	38	绝缘等级 Insulation class		H（180）

DC 24V
AC 220V
其它规格可定做
Other can be customized

BYZ11-90-01G

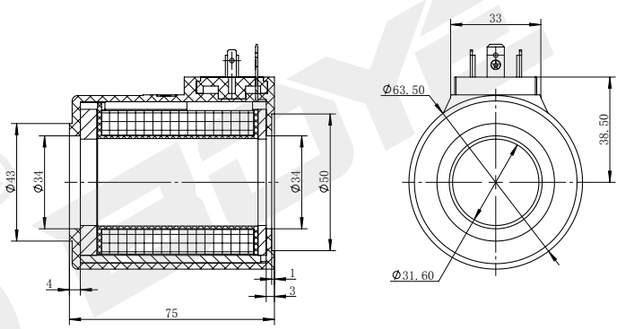

技术参数 /technical parameter					
环境温度 Ambienttemperature	°C	-25~50	防护等级 Degree of protection		IP65
电压波动范围 Voltage fluctuation range	%	85~110	通电持续率 Power on duration	%	100
额定功率 Rated power	W	38	绝缘等级 Insulation class		H（180）

样本数据来源于试验室环境，仅供参考，贵公司如需最新数据或有特殊需求，欢迎联系搏业液压工程师。
The sample data comes from the laboratory environment and is only for reference. If your company needs the latest data or has special needs, please contact Boye hydraulic engineer.

直流阀用线圈
DC coil for valves

DC 24V
AC 220V
其它规格可定做
Other can be customized

BYZ12-40-01A

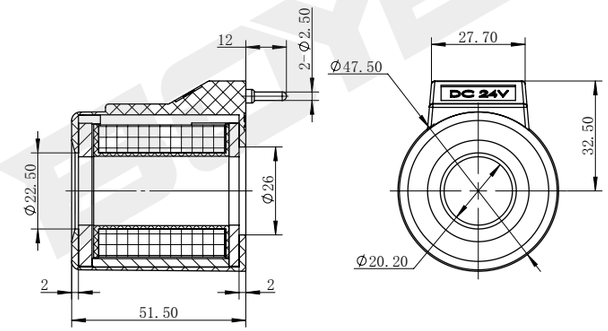

技术参数 /technical parameter					
环境温度 Ambienttemperature	°C	-25~50	防护等级 Degree of protection		IP65
电压波动范围 Voltage fluctuation range	%	85~110	通电持续率 Power on duration	%	100
额定功率 Rated power	W	30	绝缘等级 Insulation class		H（180）

DC 24V
AC 220V
其它规格可定做
Other can be customized

BYZ12-40-01G

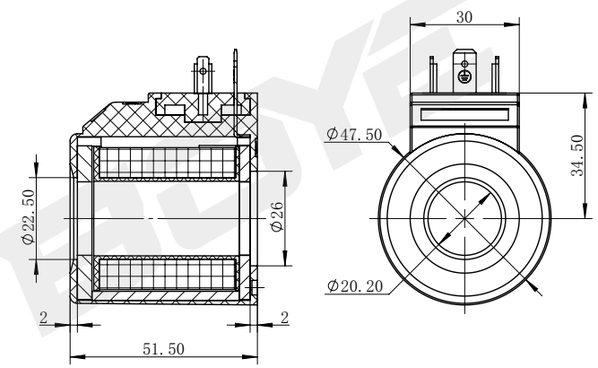

技术参数 /technical parameter					
环境温度 Ambienttemperature	°C	-25~50	防护等级 Degree of protection		IP65
电压波动范围 Voltage fluctuation range	%	85~110	通电持续率 Power on duration	%	100
额定功率 Rated power	W	30	绝缘等级 Insulation class		H（180）

样本数据来源于试验室环境，仅供参考，贵公司如需最新数据或有特殊需求，欢迎联系搏业液压工程师。
The sample data comes from the laboratory environment and is only for reference. If your company needs the latest data or has special needs, please contact Boye hydraulic engineer.

直流阀用线圈
DC coil for valves

DC 24V
AC 220V
其它规格可定做
Other can be customized

BYZ12-90-01A

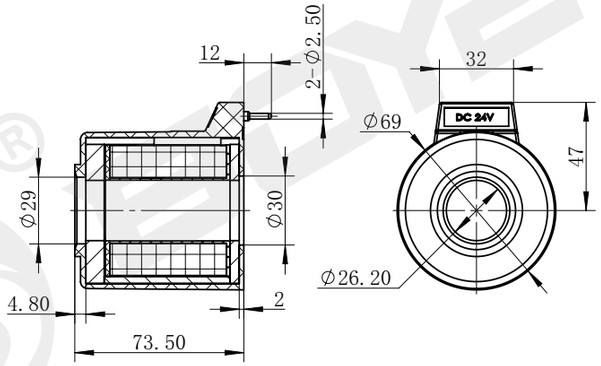

技术参数 /technical parameter					
环境温度 Ambienttemperature	°C	-25~50	防护等级 Degree of protection		IP65
电压波动范围 Voltage fluctuation range	%	85~110	通电持续率 Power on duration	%	100
额定功率 Rated power	W	38	绝缘等级 Insulation class		H（180）

DC 24V
AC 220V
其它规格可定做
Other can be customized

BYZ12-90-01G

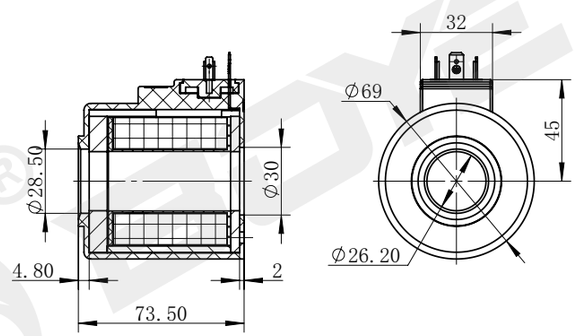

技术参数 /technical parameter					
环境温度 Ambienttemperature	°C	-25~50	防护等级 Degree of protection		IP65
电压波动范围 Voltage fluctuation range	%	85~110	通电持续率 Power on duration	%	100
额定功率 Rated power	W	38	绝缘等级 Insulation class		H（180）

样本数据来源于试验室环境，仅供参考，贵公司如需最新数据或有特殊需求，欢迎联系搏业液压工程师。
The sample data comes from the laboratory environment and is only for reference. If your company needs the latest data or has special needs, please contact Boye hydraulic engineer.

直流阀用线圈
DC coil for valves

DC 24V
AC 220V
其它规格可定做
Other can be customized

BYZ16-40-01D

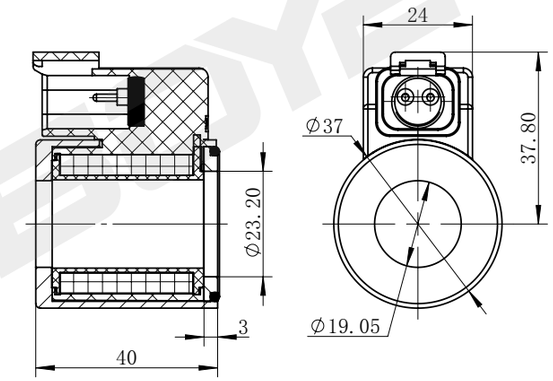

技术参数 /technical parameter					
环境温度 Ambienttemperature	°C	-25~50	防护等级 Degree of protection		IP67
电压波动范围 Voltage fluctuation range	%	85~110	通电持续率 Power on duration	%	100
额定功率 Rated power	W	18	绝缘等级 Insulation class		H（180）

DC 24V
AC 220V
其它规格可定做
Other can be customized

BYZ16-40-01G

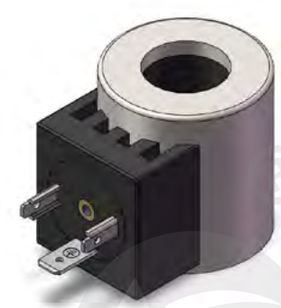

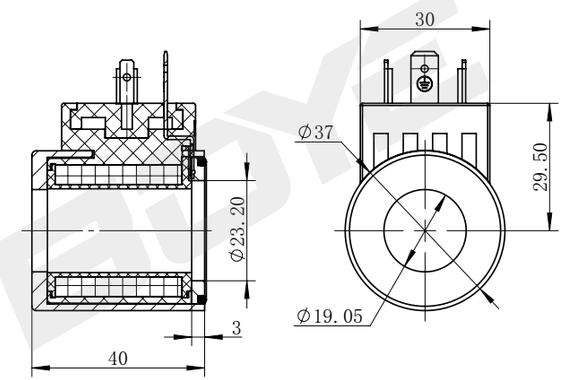

技术参数 /technical parameter					
环境温度 Ambienttemperature	°C	-25~50	防护等级 Degree of protection		IP65
电压波动范围 Voltage fluctuation range	%	85~110	通电持续率 Power on duration	%	100
额定功率 Rated power	W	18	绝缘等级 Insulation class		H（180）

样本数据来源于试验室环境，仅供参考，贵公司如需最新数据或有特殊需求，欢迎联系搏业液压工程师。
The sample data comes from the laboratory environment and is only for reference. If your company needs the latest data or has special needs, please contact Boye hydraulic engineer.

TEL:0574-86587131 www.nbboye.net

直流阀用线圈
DC coil for valves

DC 12V
DC 24V
其它规格可定做
Other can be customized

BYZ16-40A-01D

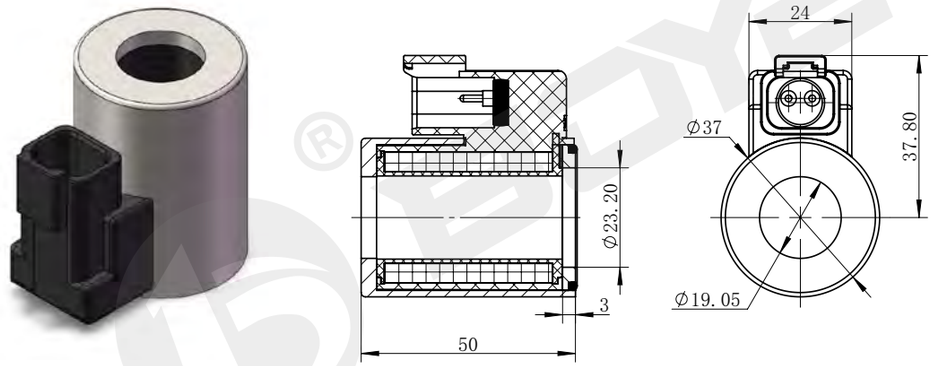

技术参数 /technical parameter					
环境温度 Ambienttemperature	°C	-25~50	防护等级 Degree of protection		IP67
电压波动范围 Voltage fluctuation range	%	85~110	通电持续率 Power on duration	%	100
额定功率 Rated power	W	22	绝缘等级 Insulation class		H（180）

DC 24V
AC 220V
其它规格可定做
Other can be customized

BYZ16-40A-01G

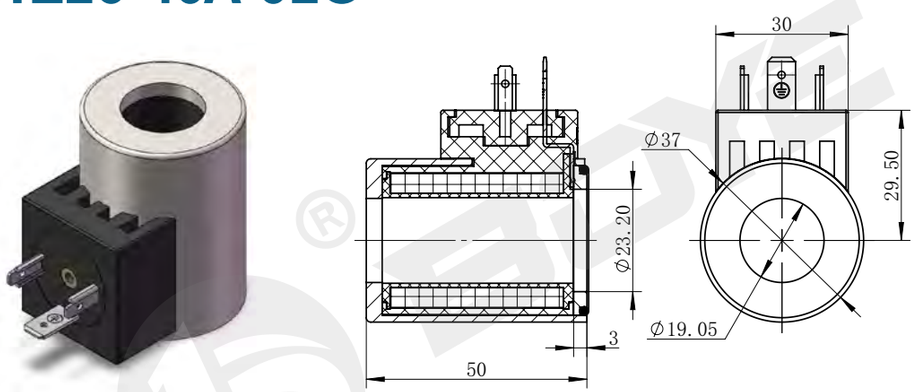

技术参数 /technical parameter					
环境温度 Ambienttemperature	°C	-25~50	防护等级 Degree of protection		IP65
电压波动范围 Voltage fluctuation range	%	85~110	通电持续率 Power on duration	%	100
额定功率 Rated power	W	22	绝缘等级 Insulation class		H（180）

样本数据来源于试验室环境，仅供参考，贵公司如需最新数据或有特殊需求，欢迎联系搏业液压工程师。
The sample data comes from the laboratory environment and is only for reference. If your company needs the latest data or has special needs, please contact Boye hydraulic engineer.

直流阀用线圈
DC coil for valves

DC 12V
DC 24V
其它规格可定做
Other can be customized

BYZ16-60-01D

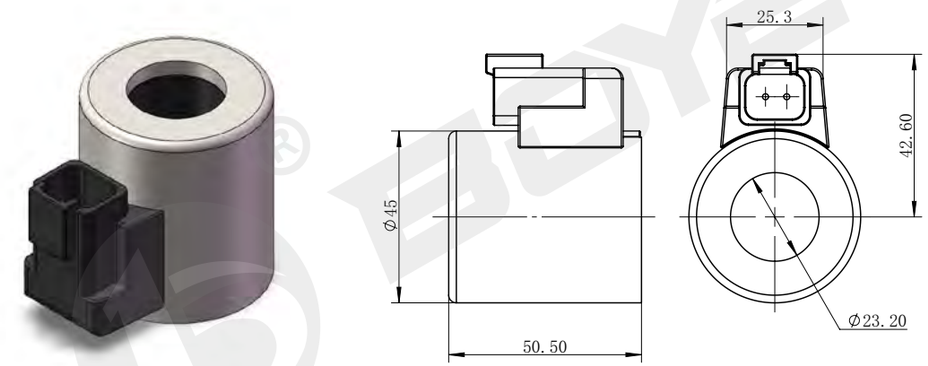

技术参数 /technical parameter					
环境温度 Ambienttemperature	°C	-25~50	防护等级 Degree of protection		IP67
电压波动范围 Voltage fluctuation range	%	85~110	通电持续率 Power on duration	%	100
额定功率 Rated power	W	23	绝缘等级 Insulation class		H（180）

DC 24V
AC 220V
其它规格可定做
Other can be customized

BYZ16-60-01G

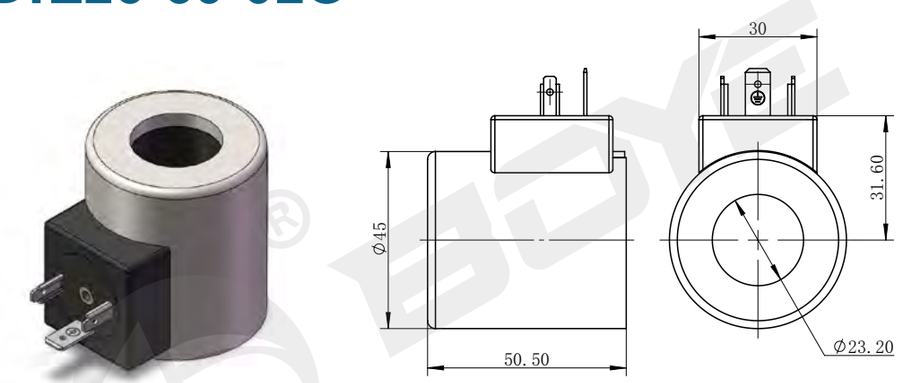

技术参数 /technical parameter					
环境温度 Ambienttemperature	°C	-25~50	防护等级 Degree of protection		IP65
电压波动范围 Voltage fluctuation range	%	85~110	通电持续率 Power on duration	%	100
额定功率 Rated power	W	23	绝缘等级 Insulation class		H（180）

样本数据来源于试验室环境，仅供参考，贵公司如需最新数据或有特殊需求，欢迎联系搏业液压工程师。
The sample data comes from the laboratory environment and is only for reference. If your company needs the latest data or has special needs, please contact Boye hydraulic engineer.

直流阀用线圈
DC coil for valves

DC 12V
DC 24V
其它规格可定做
Other can be customized

BYZ16-90-01D

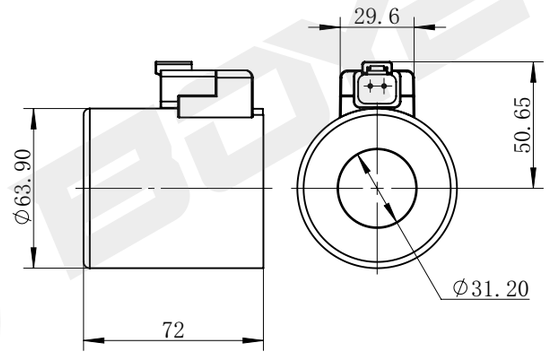

技术参数 /technical parameter					
环境温度 Ambienttemperature	°C	-25~50	防护等级 Degree of protection		IP67
电压波动范围 Voltage fluctuation range	%	85~110	通电持续率 Power on duration	%	100
额定功率 Rated power	W	40	绝缘等级 Insulation class		H（180）

DC 24V
AC 220V
其它规格可定做
Other can be customized

BYZ16-90-01G

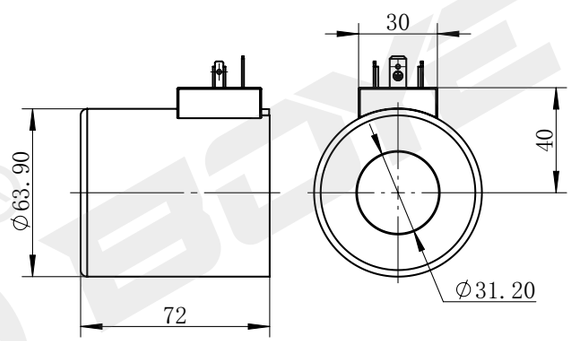

技术参数 /technical parameter					
环境温度 Ambienttemperature	°C	-25~50	防护等级 Degree of protection		IP65
电压波动范围 Voltage fluctuation range	%	85~110	通电持续率 Power on duration	%	100
额定功率 Rated power	W	40	绝缘等级 Insulation class		H（180）

样本数据来源于试验室环境，仅供参考，贵公司如需最新数据或有特殊需求，欢迎联系搏业液压工程师。
The sample data comes from the laboratory environment and is only for reference. If your company needs the latest data or has special needs, please contact Boye hydraulic engineer.

交流阀用线圈
AC coil for valves

AC 110V 50HZ
AC 220V 50HZ
其它规格可定做
Other can be customized

BYJ09-27-01G

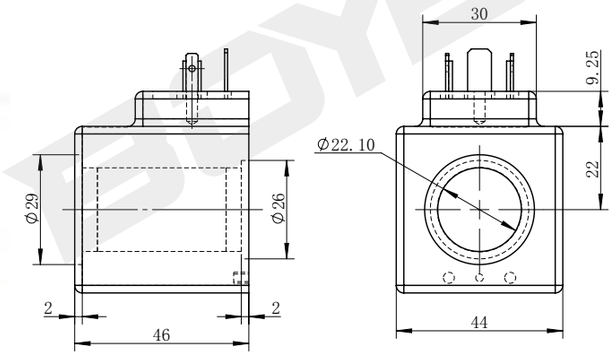

技术参数 /technical parameter					
环境温度 Ambienttemperature	°C	-25~50	防护等级 Degree of protection		IP65
电压波动范围 Voltage fluctuation range	%	85~110	通电持续率 Power on duration	%	100
额定功率 Rated power	W	30	绝缘等级 Insulation class		H（180）

AC 110V 50HZ
AC 220V 50HZ
其它规格可定做
Other can be customized

BYJ09-54-01G

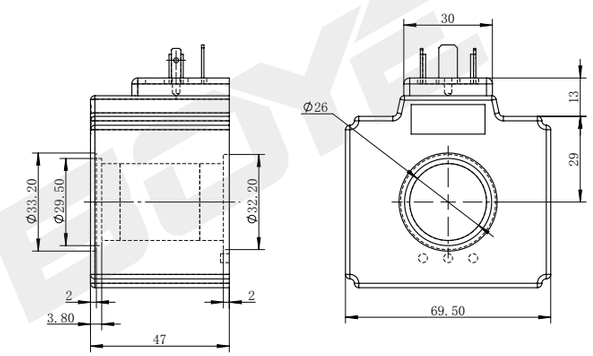

技术参数 /technical parameter					
环境温度 Ambienttemperature	°C	-25~50	防护等级 Degree of protection		IP65
电压波动范围 Voltage fluctuation range	%	85~110	通电持续率 Power on duration	%	100
额定功率 Rated power	W	40	绝缘等级 Insulation class		H（180）

样本数据来源于试验室环境，仅供参考，贵公司如需最新数据或有特殊需求，欢迎联系搏业液压工程师。
The sample data comes from the laboratory environment and is only for reference. If your company needs the latest data or has special needs, please contact Boye hydraulic engineer.

TEL:0574-86587131 www.nbboye.net

交流阀用线圈
AC coil for valves

AC 110V 50HZ
AC 220V 50HZ
其它规格可定做
Other can be customized

BYJ11-27-01A

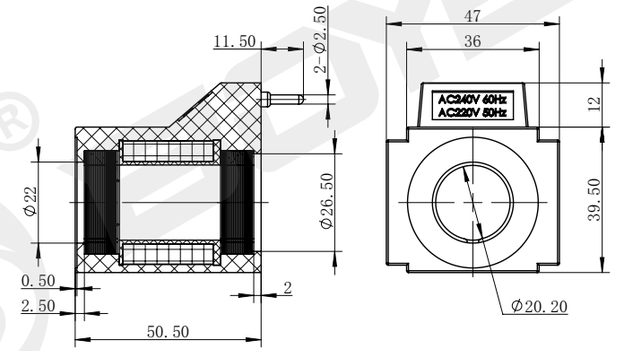

技术参数 /technical parameter					
环境温度 Ambienttemperature	°C	-25~50	防护等级 Degree of protection		IP65
电压波动范围 Voltage fluctuation range	%	85~110	通电持续率 Power on duration	%	100
额定功率 Rated power	W	30	绝缘等级 Insulation class		H（180）

AC 110V 50HZ
AC 220V 50HZ
其它规格可定做
Other can be customized

BYJ11-27-01G

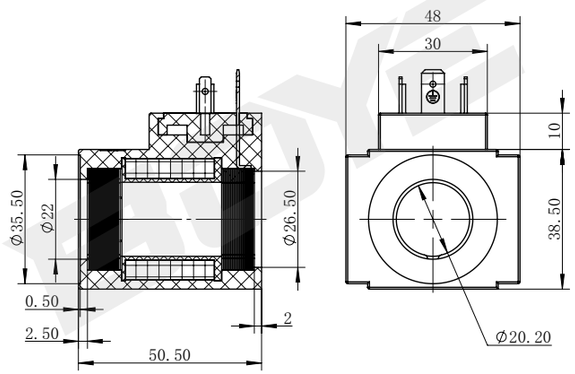

技术参数 /technical parameter					
环境温度 Ambienttemperature	°C	-25~50	防护等级 Degree of protection		IP65
电压波动范围 Voltage fluctuation range	%	85~110	通电持续率 Power on duration	%	100
额定功率 Rated power	W	30	绝缘等级 Insulation class		H（180）

样本数据来源于试验室环境，仅供参考，贵公司如需最新数据或有特殊需求，欢迎联系搏业液压工程师。
The sample data comes from the laboratory environment and is only for reference. If your company needs the latest data or has special needs, please contact Boye hydraulic engineer.

交流阀用线圈
AC coil for valves

AC 110V 50HZ
AC 220V 50HZ
其它规格可定做
Other can be customized

BYJ11-54-01A

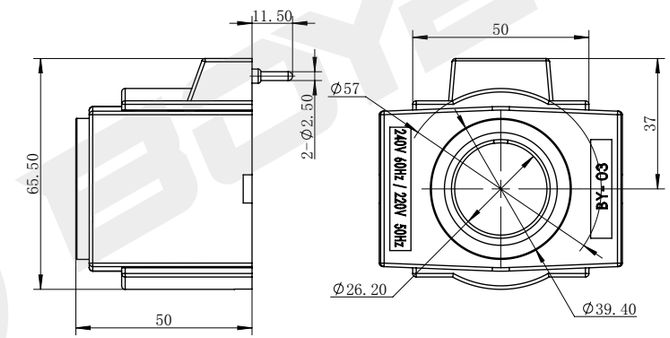

技术参数 /technical parameter					
环境温度 Ambienttemperature	°C	-25~50	防护等级 Degree of protection		IP65
电压波动范围 Voltage fluctuation range	%	85~110	通电持续率 Power on duration	%	100
额定功率 Rated power	W	40	绝缘等级 Insulation class		H（180）

AC 110V 50HZ
AC 220V 50HZ
其它规格可定做
Other can be customized

BYJ11-54-01G

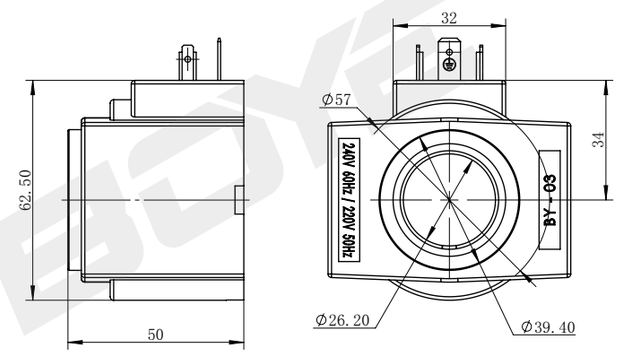

技术参数 /technical parameter					
环境温度 Ambienttemperature	°C	-25~50	防护等级 Degree of protection		IP65
电压波动范围 Voltage fluctuation range	%	85~110	通电持续率 Power on duration	%	100
额定功率 Rated power	W	40	绝缘等级 Insulation class		H（180）

样本数据来源于试验室环境，仅供参考，贵公司如需最新数据或有特殊需求，欢迎联系搏业液压工程师。
The sample data comes from the laboratory environment and is only for reference. If your company needs the latest data or has special needs, please contact Boye hydraulic engineer.

交流阀用线圈
AC coil for valves

AC 110V 50HZ
AC 220V 50HZ
其它规格可定做
Other can be customized

BYJ12-27-01A

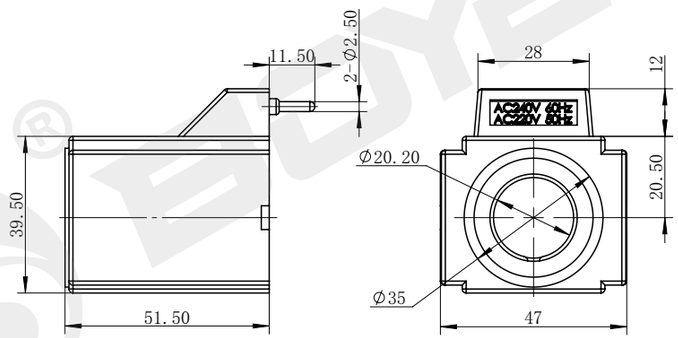

技术参数 /technical parameter					
环境温度 Ambienttemperature	°C	-25~50	防护等级 Degree of protection		IP65
电压波动范围 Voltage fluctuation range	%	85~110	通电持续率 Power on duration	%	100
额定功率 Rated power	W	30	绝缘等级 Insulation class		H（180）

AC 110V 50HZ
AC 220V 50HZ
其它规格可定做
Other can be customized

BYJ12-27-01G

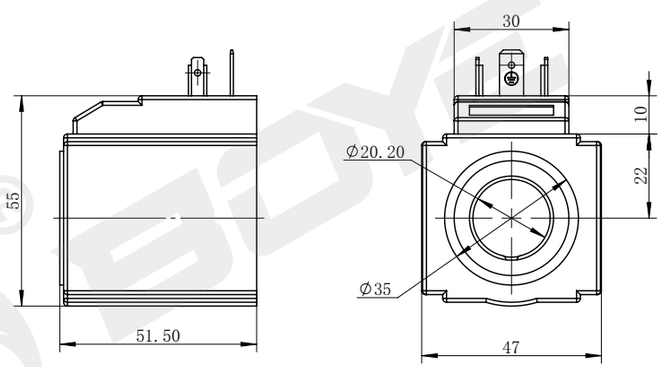

技术参数 /technical parameter					
环境温度 Ambienttemperature	°C	-25~50	防护等级 Degree of protection		IP65
电压波动范围 Voltage fluctuation range	%	85~110	通电持续率 Power on duration	%	100
额定功率 Rated power	W	30	绝缘等级 Insulation class		H（180）

样本数据来源于试验室环境，仅供参考，贵公司如需最新数据或有特殊需求，欢迎联系搏业液压工程师。
The sample data comes from the laboratory environment and is only for reference. If your company needs the latest data or has special needs, please contact Boye hydraulic engineer.

交流阀用线圈
AC coil for valves

AC 110V 50HZ
AC 220V 50HZ
其它规格可定做
Other can be customized

BYJ12-54-01A

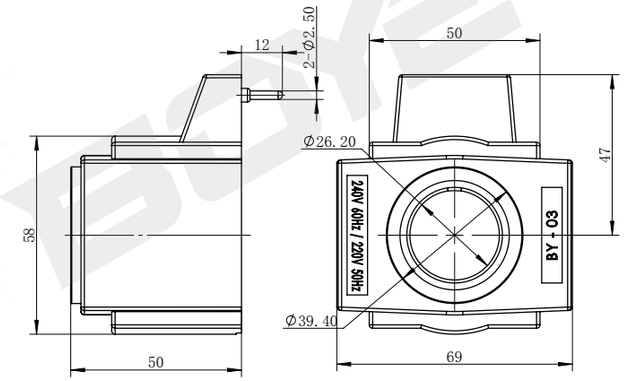

技术参数 /technical parameter					
环境温度 Ambienttemperature	°C	-25~50	防护等级 Degree of protection		IP65
电压波动范围 Voltage fluctuation range	%	85~110	通电持续率 Power on duration	%	100
额定功率 Rated power	W	40	绝缘等级 Insulation class		H（180）

样本数据来源于试验室环境，仅供参考，贵公司如需最新数据或有特殊需求，欢迎联系搏业液压工程师。
The sample data comes from the laboratory environment and is only for reference. If your company needs the latest data or has special needs, please contact Boye hydraulic engineer.

TEL:0574-86587131 www.nbboye.net

汽车线圈
Automotive coil

DC 12V
DC 24V
其它规格可定做
Other can be customized

BYQ01-32-01D

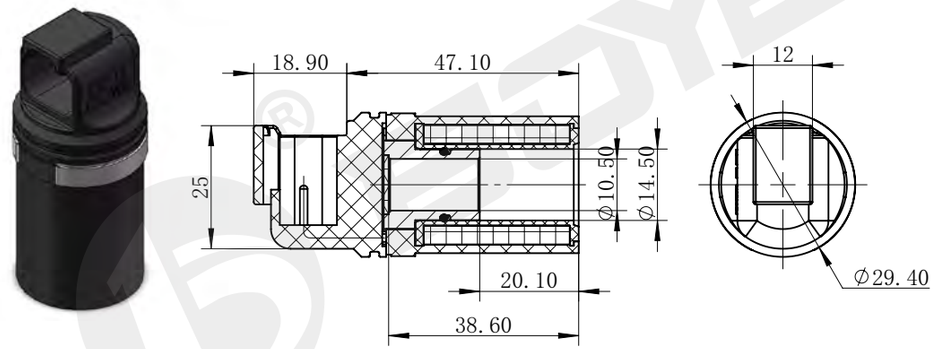

技术参数 /technical parameter					
环境温度 Ambienttemperature	°C	-25~50	防护等级 Degree of protection		IP67
电压波动范围 Voltage fluctuation range	%	85~110	通电持续率 Power on duration	%	100
额定功率 Rated power	W	18	绝缘等级 Insulation class		H（180）

DC 12V
DC 24V
其它规格可定做
Other can be customized

BYQ01-32-02D

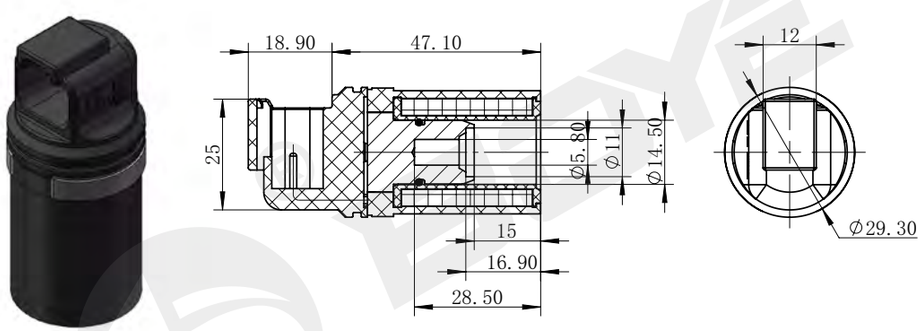

技术参数 /technical parameter					
环境温度 Ambienttemperature	°C	-25~50	防护等级 Degree of protection		IP67
电压波动范围 Voltage fluctuation range	%	85~110	通电持续率 Power on duration	%	100
额定功率 Rated power	W	18	绝缘等级 Insulation class		H（180）

样本数据来源于试验室环境，仅供参考，贵公司如需最新数据或有特殊需求，欢迎联系搏业液压工程师。
The sample data comes from the laboratory environment and is only for reference. If your company needs the latest data or has special needs, please contact Boye hydraulic engineer.

汽车线圈
Automotive coil

DC 12V
DC 24V
其它规格可定做
Other can be customized

BYQ01-36-01Q

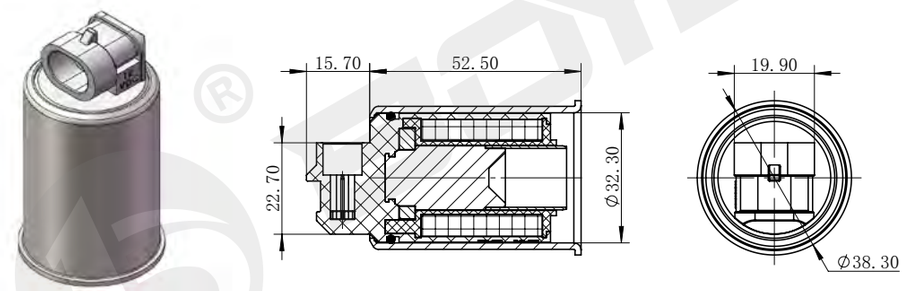

技术参数 /technical parameter					
环境温度 Ambienttemperature	°C	-25~50	防护等级 Degree of protection		IP67
电压波动范围 Voltage fluctuation range	%	85~110	通电持续率 Power on duration	%	100
额定功率 Rated power	W	19	绝缘等级 Insulation class		H（180）

DC 12V
DC 24V
其它规格可定做
Other can be customized

BYQ02-24-01Q

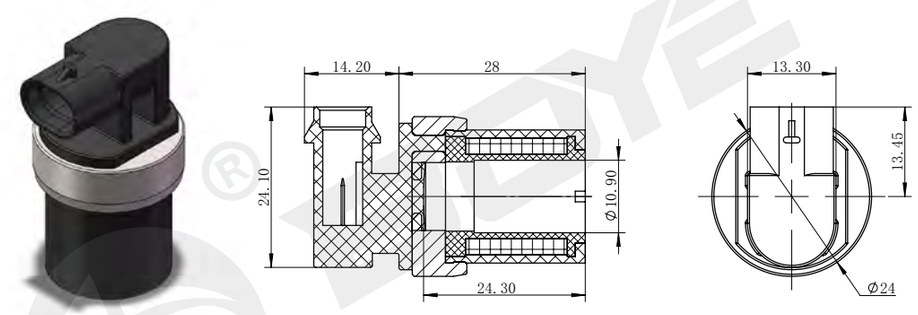

技术参数 /technical parameter					
环境温度 Ambienttemperature	°C	-25~50	防护等级 Degree of protection		IP67
电压波动范围 Voltage fluctuation range	%	85~110	通电持续率 Power on duration	%	100
额定功率 Rated power	W	14	绝缘等级 Insulation class		H（180）

样本数据来源于试验室环境，仅供参考，贵公司如需最新数据或有特殊需求，欢迎联系搏业液压工程师。
The sample data comes from the laboratory environment and is only for reference. If your company needs the latest data or has special needs, please contact Boye hydraulic engineer.

TEL:0574-86587131 www.nbboye.net

汽车线圈
Automotive coil

DC 12V
DC 24V
其它规格可定做
Other can be customized

BYQ02-24-02Q

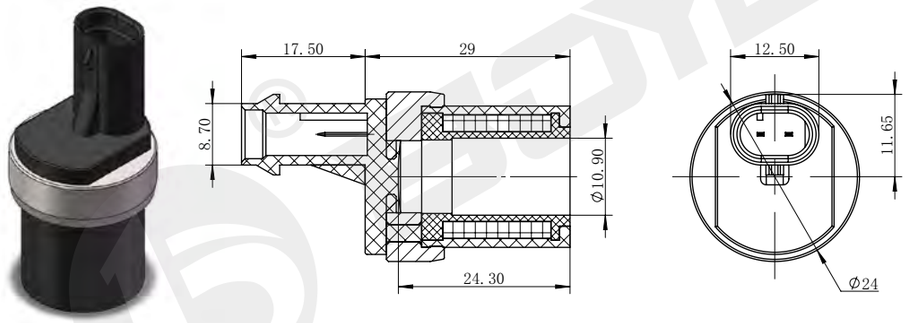

技术参数 /technical parameter					
环境温度 Ambienttemperature	°C	-25~50	防护等级 Degree of protection		IP67
电压波动范围 Voltage fluctuation range	%	85~110	通电持续率 Power on duration	%	100
额定功率 Rated power	W	14	绝缘等级 Insulation class		H（180）

DC 12V
DC 24V
其它规格可定做
Other can be customized

BYQ03-28-01Q

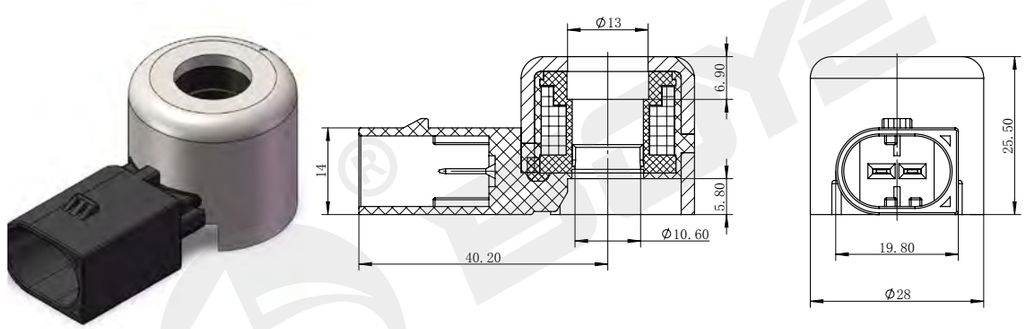

技术参数 /technical parameter					
环境温度 Ambienttemperature	°C	-25~50	防护等级 Degree of protection		IP67
电压波动范围 Voltage fluctuation range	%	85~110	通电持续率 Power on duration	%	100
额定电阻 Rated resistance	Ω	0.52	绝缘等级 Insulation class		H（180）

样本数据来源于试验室环境，仅供参考，贵公司如需最新数据或有特殊需求，欢迎联系搏业液压工程师。
The sample data comes from the laboratory environment and is only for reference. If your company needs the latest data or has special needs, please contact Boye hydraulic engineer.

汽车线圈
Automotive coil

DC 12V
DC 24V
其它规格可定做
Other can be customized

BYQ03-28-02Q

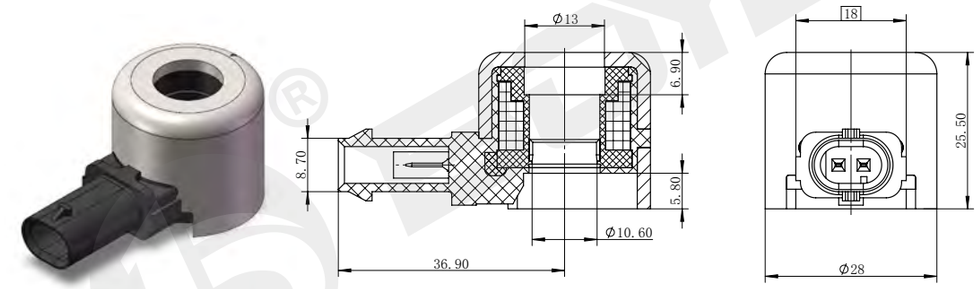

技术参数 /technical parameter					
环境温度 Ambienttemperature	°C	-25~50	防护等级 Degree of protection		IP67
电压波动范围 Voltage fluctuation range	%	85~110	通电持续率 Power on duration	%	100
额定电阻 Rated resistance	Ω	0.52	绝缘等级 Insulation class		H（180）

DC 12V
DC 24V
其它规格可定做
Other can be customized

BYQ03-28-03Q

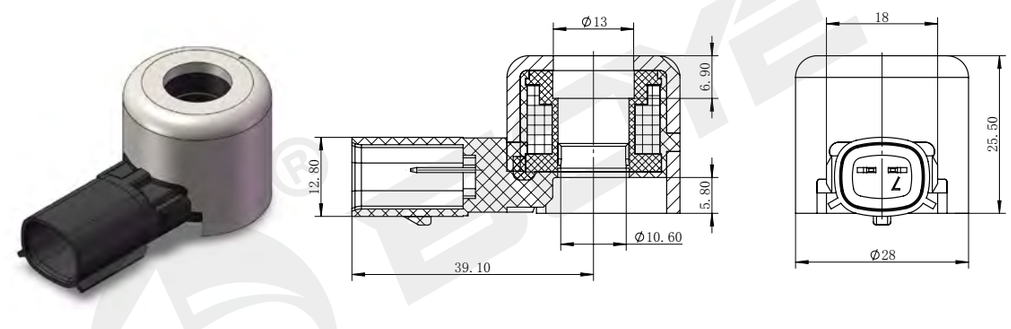

技术参数 /technical parameter					
环境温度 Ambienttemperature	°C	-25~50	防护等级 Degree of protection		IP67
电压波动范围 Voltage fluctuation range	%	85~110	通电持续率 Power on duration	%	100
额定电阻 Rated resistance	Ω	0.52	绝缘等级 Insulation class		H（180）

样本数据来源于试验室环境，仅供参考，贵公司如需最新数据或有特殊需求，欢迎联系搏业液压工程师。
The sample data comes from the laboratory environment and is only for reference. If your company needs the latest data or has special needs, please contact Boye hydraulic engineer.

TEL:0574-86587113 www.nbboye.net

汽车线圈
Automotive coil

DC 12V
DC 24V
其它规格可定做
Other can be customized

BYQ03-28-04Q

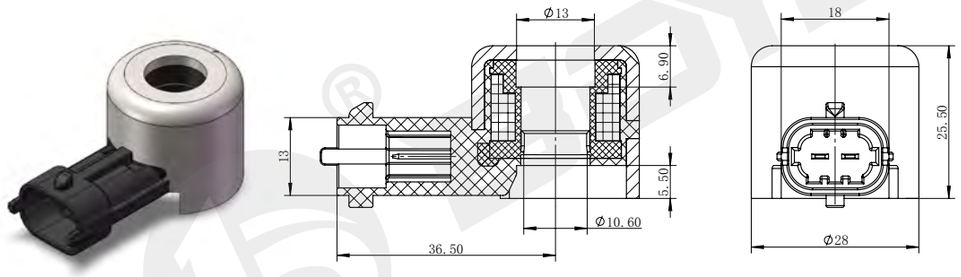

技术参数 /technical parameter					
环境温度 Ambienttemperature	°C	-25~50	防护等级 Degree of protection		IP67
电压波动范围 Voltage fluctuation range	%	85~110	通电持续率 Power on duration	%	100
额定电阻 Rated resistance	Ω	0.52	绝缘等级 Insulation class		H（180）

DC 12V
DC 24V
其它规格可定做
Other can be customized

BYQ04-28-01Q

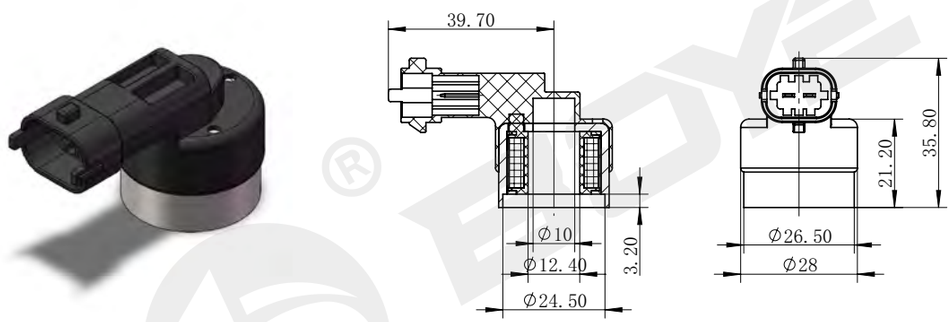

技术参数 /technical parameter					
环境温度 Ambienttemperature	°C	-25~50	防护等级 Degree of protection		IP67
电压波动范围 Voltage fluctuation range	%	85~110	通电持续率 Power on duration	%	100
额定功率 Rated power	W	30	绝缘等级 Insulation class		H（180）

样本数据来源于试验室环境，仅供参考，贵公司如需最新数据或有特殊需求，欢迎联系搏业液压工程师。
The sample data comes from the laboratory environment and is only for reference. If your company needs the latest data or has special needs, please contact Boye hydraulic engineer.

汽车线圈
Automotive coil

DC 12V
DC 24V
其它规格可定做
Other can be customized

BYQ05-29-01D

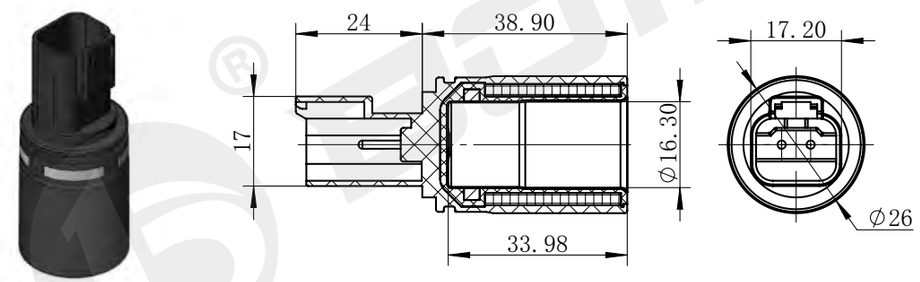

技术参数 /technical parameter					
环境温度 Ambienttemperature	°C	-25~50	防护等级 Degree of protection		IP67
电压波动范围 Voltage fluctuation range	%	85~110	通电持续率 Power on duration	%	100
额定功率 Rated power	W	19	绝缘等级 Insulation class		H（180）

DC 12V
DC 24V
其它规格可定做
Other can be customized

BYQ05-30-01D

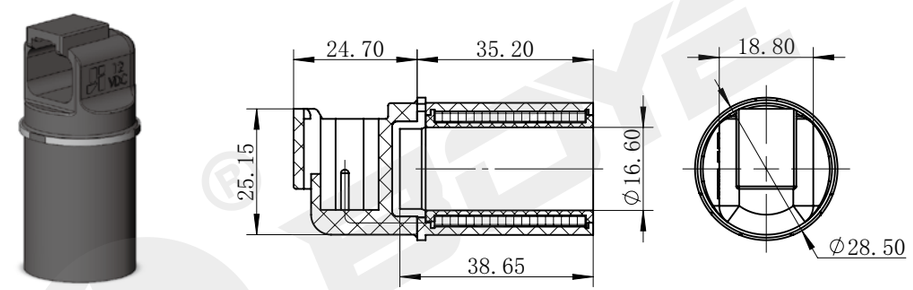

技术参数 /technical parameter					
环境温度 Ambienttemperature	°C	-25~50	防护等级 Degree of protection		IP67
电压波动范围 Voltage fluctuation range	%	85~110	通电持续率 Power on duration	%	100
额定功率 Rated power	W	16	绝缘等级 Insulation class		H（180）

样本数据来源于试验室环境，仅供参考，贵公司如需最新数据或有特殊需求，欢迎联系搏业液压工程师。
The sample data comes from the laboratory environment and is only for reference. If your company needs the latest data or has special needs, please contact Boye hydraulic engineer.

TEL:0574-86587131 www.nbboye.net

汽车线圈
Automotive coil

BYQ10-32-01D

DC 12V
DC 24V
其它规格可定做
Other can be customized

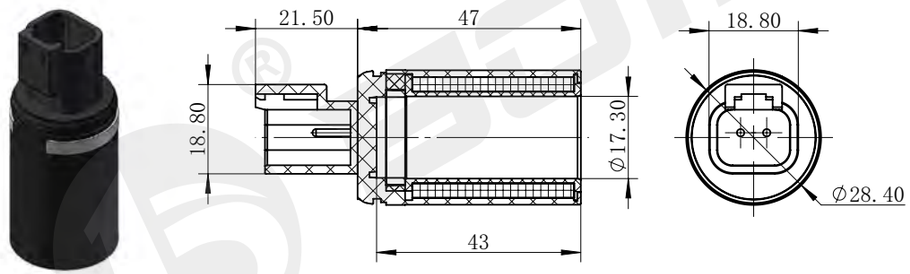

技术参数 /technical parameter					
环境温度 Ambienttemperature	℃	-25~50	防护等级 Degree of protection		IP67
电压波动范围 Voltage fluctuation range	%	85~110	通电持续率 Power on duration	%	100
额定功率 Rated power	W	26	绝缘等级 Insulation class		H（180）

BYQ10-32-01J

DC 12V
DC 24V
其它规格可定做
Other can be customized

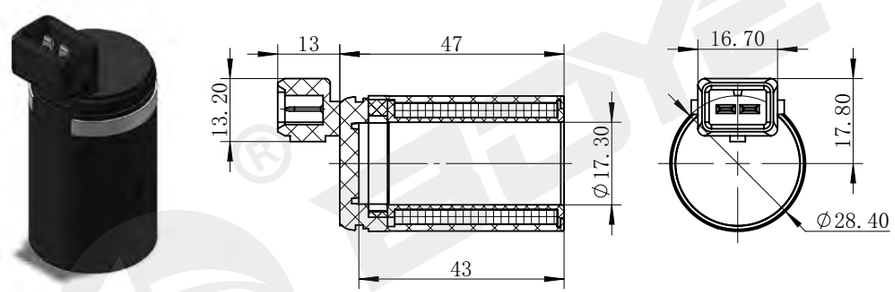

技术参数 /technical parameter					
环境温度 Ambienttemperature	℃	-25~50	防护等级 Degree of protection		IP67
电压波动范围 Voltage fluctuation range	%	85~110	通电持续率 Power on duration	%	100
额定功率 Rated power	W	26	绝缘等级 Insulation class		H（180）

样本数据来源于试验室环境，仅供参考，贵公司如需最新数据或有特殊需求，欢迎联系搏业液压工程师。
The sample data comes from the laboratory environment and is only for reference. If your company needs the latest data or has special needs, please contact Boye hydraulic engineer.

BYT 插装阀用导磁套

MAGNETIC GUIDE TUBE FOR CARTRIDGE VALVE

- 搏业液压，BYT 系列插装阀用导磁套，属于电磁插装阀关键电磁驱动元件，广泛应用于工业、工程、农业、冶金、船舶、军工机械等领域，是实现液压自动化控制的关键元件，产品质量直接决定整个系统工作稳定性和可靠性
- 产品设计符合 JBT5244/VDE0580 标准。
- 采用优质导磁材料，保证电磁铁输出力稳定可靠。
- 多种连接方式可选，外六角螺纹、对方螺纹、法兰等可满足不同领域安装需要。
- 多种焊接结构可选，氩弧焊、铜堆焊、铜钎焊等，可满足不同产品特性要求。
- 多种输出力方式可选，推式、拉式、双向，可满足电磁阀不同工作模式。
- 工作压力：≤ 21MPa
- 极限压力：≥ 31.5MPa
- 爆破压力：≥ 63MPa
- 机械寿命：＞ 1000 万次
- 脉冲疲劳寿命：＞ 200 万次
- 表面处理：蓝白锌 / 锌镍合金。
- 标准导磁套若不能满足您的需求，欢迎联系搏业液压，可根据您的需求定制，欢迎咨询。

- Boye hydraulic, magnetic guide sleeve for byt series cartridge valve, belongs to the key electromagnetic driving element of electromagnetic cartridge valve. It is widely used in industry, engineering, agriculture, metallurgy, shipbuilding, military machinery and other fields. It is a key element to realize hydraulic automatic control. The product quality directly determines the working stability and reliability of the whole system. The company has successively introduced, digested and absorbed the product technology of many international well-known brands. After years of accumulation, the company has produced more than 30 million magnetic guide sleeves, has rich experience in product R & D and production, and all key indicators of products have achieved 100% ex factory inspection.
- The product design conforms to JBT5244 / VDE0580 standard.
- High quality magnetic conductive materials are adopted to ensure the stable and reliable output force of electromagnet.
- A variety of connection modes are available, and external hexagonal thread, square thread and flange can meet the installation needs of different fields.
- A variety of welding structures can be selected, such as argon arc welding and copper brazing, which can meet the requirements of different product characteristics.
- A variety of output force modes are available, including push, pull and two-way, which can meet different working modes of solenoid valve.
- Working pressure: ≤ 21MPa
- Limit pressure: ≥ 31.5Mpa
- Burst pressure: ≥ 63Mpa
- Mechanical life: □ 10 million times
- Pulse fatigue life: □ 2 million times
- Surface treatment: blue white zinc/zinc-nickel alloy.
- If the standard magnetic sleeve can not meet your needs, please contact Boye hydraulic, which can be customized according to your needs. Welcome to consult.

插装阀用导磁套

Magnetic guide tube for cartridge valve

BYT01-10-01

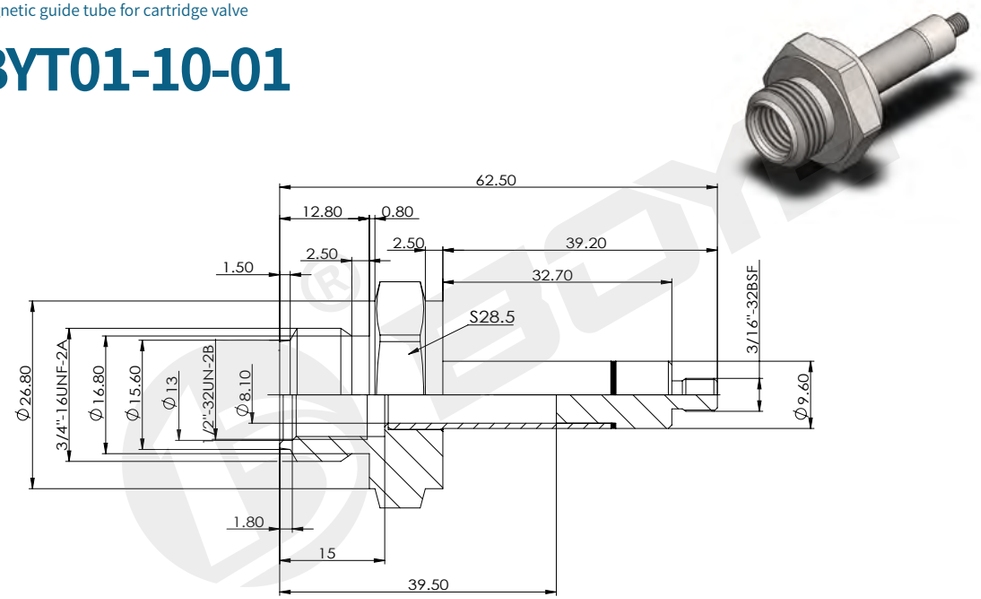

技术参数 /technical parameter					
工作油压 Working oil pressure	MPa	≤ 21	六角尺寸 Hexagon size	mm	28.5

BYT01-13-01

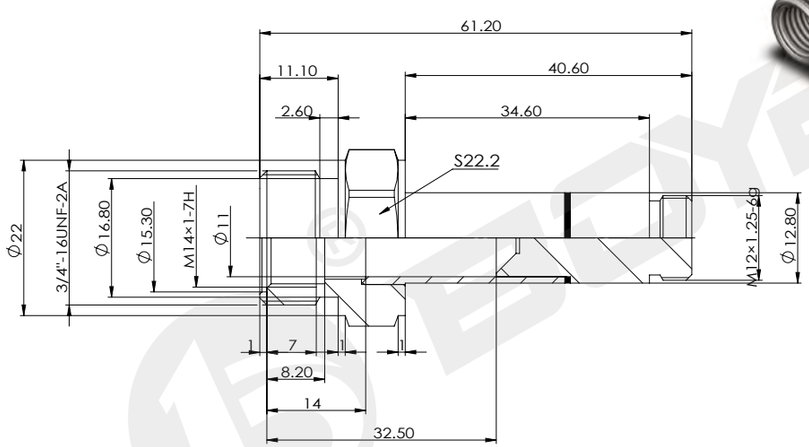

技术参数 /technical parameter					
工作油压 Working oil pressure	MPa	≤ 21	六角尺寸 Hexagon size	mm	22.2

样本数据来源于试验室环境，仅供参考，贵公司如需最新数据或有特殊需求，欢迎联系搏业液压工程师。

The sample data comes from the laboratory environment and is only for reference. If your company needs the latest data or has special needs, please contact Boye hydraulic engineer.

插装阀用导磁套

Magnetic guide tube for cartridge valve

BYT01-13-02M

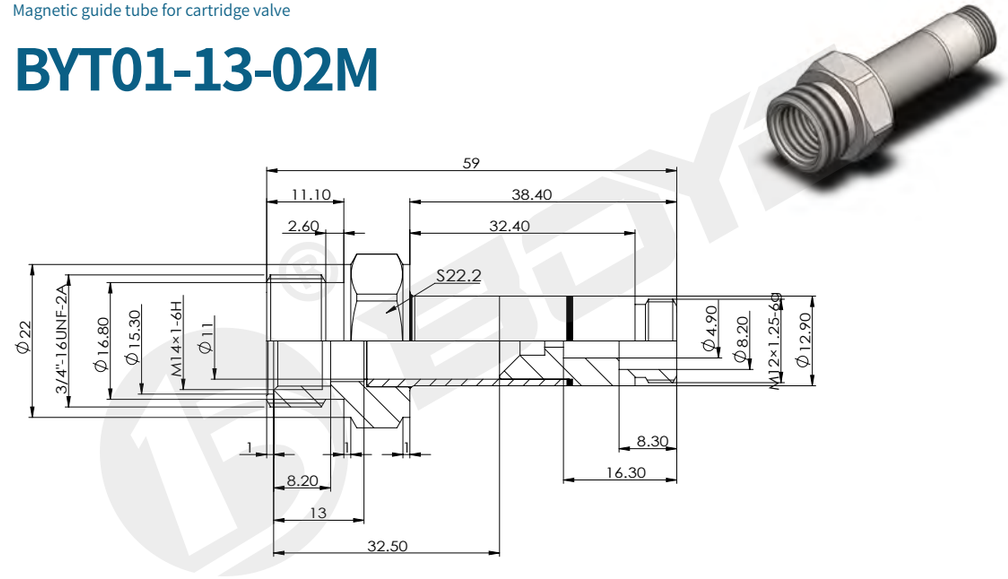

技术参数 /technical parameter					
工作油压 Working oil pressure	MPa	≤ 21	六角尺寸 Hexagon size	mm	22.2

BYT01-13A-01

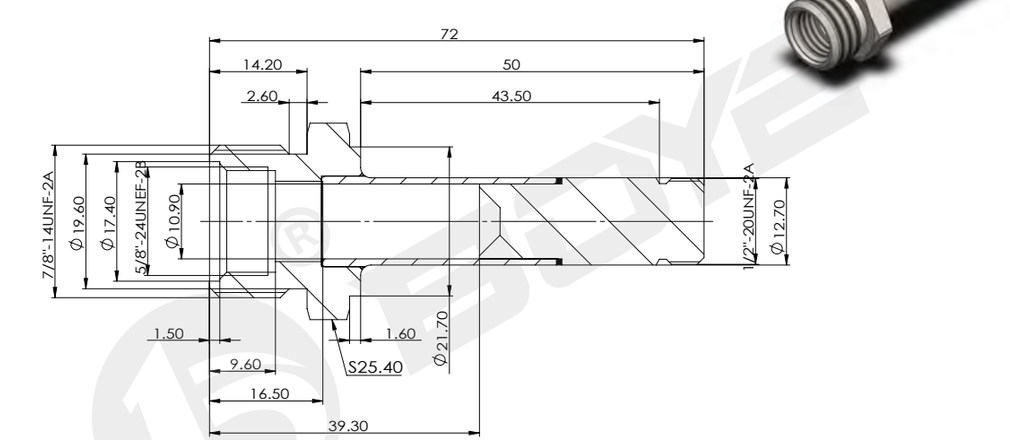

技术参数 /technical parameter					
工作油压 Working oil pressure	MPa	≤ 21	六角尺寸 Hexagon size	mm	25.4

样本数据来源于试验室环境，仅供参考，贵公司如需最新数据或有特殊需求，欢迎联系搏业液压工程师。

The sample data comes from the laboratory environment and is only for reference. If your company needs the latest data or has special needs, please contact Boye hydraulic engineer.

www.nbboye.net TEL:0574-86587131

插装阀用导磁套

Magnetic guide tube for cartridge valve

BYT01-13B-01

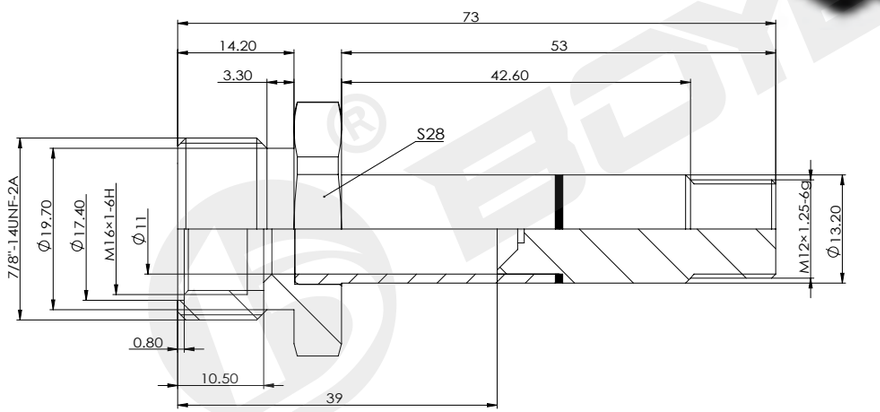

技术参数 /technical parameter					
工作油压 Working oil pressure	MPa	≤ 21	六角尺寸 Hexagon size	mm	28

BYT01-16-01

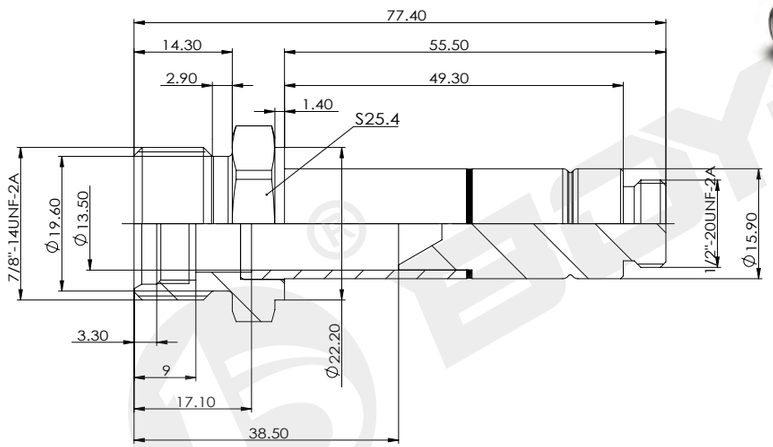

技术参数 /technical parameter					
工作油压 Working oil pressure	MPa	≤ 21	六角尺寸 Hexagon size	mm	25.4

样本数据来源于试验室环境，仅供参考，贵公司如需最新数据或有特殊需求，欢迎联系搏业液压工程师。
The sample data comes from the laboratory environment and is only for reference. If your company needs the latest data or has special needs, please contact Boye hydraulic engineer.

插装阀用导磁套

Magnetic guide tube for cartridge valve

BYT01-16A-01

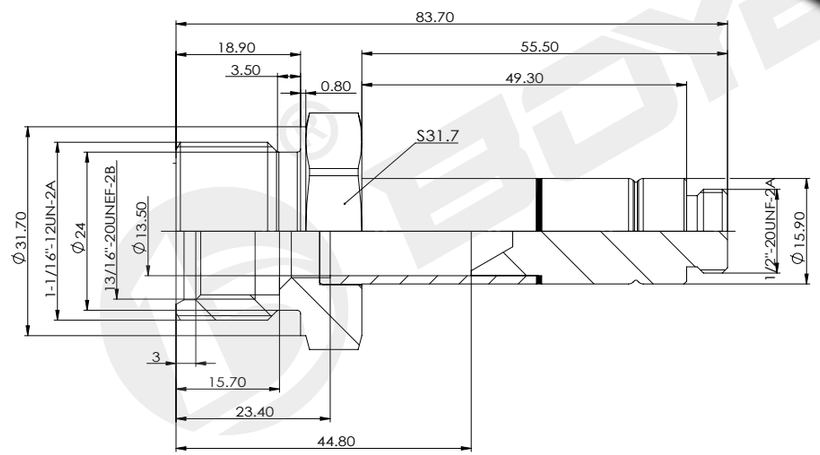

技术参数 /technical parameter					
工作油压 Working oil pressure	MPa	≤ 21	六角尺寸 Hexagon size	mm	31.75

BYT01-16B-01

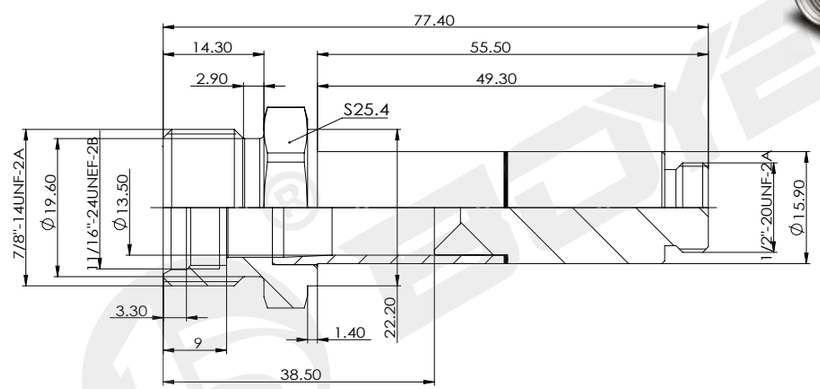

技术参数 /technical parameter					
工作油压 Working oil pressure	MPa	≤ 21	六角尺寸 Hexagon size	mm	22.2V

样本数据来源于试验室环境，仅供参考，贵公司如需最新数据或有特殊需求，欢迎联系搏业液压工程师。
The sample data comes from the laboratory environment and is only for reference. If your company needs the latest data or has special needs, please contact Boye hydraulic engineer.

www.nbboye.net TEL:0574-86587131

插装阀用导磁套

Magnetic guide tube for cartridge valve

BYT01-S13-01

双向推拉式

Two way push-pull type

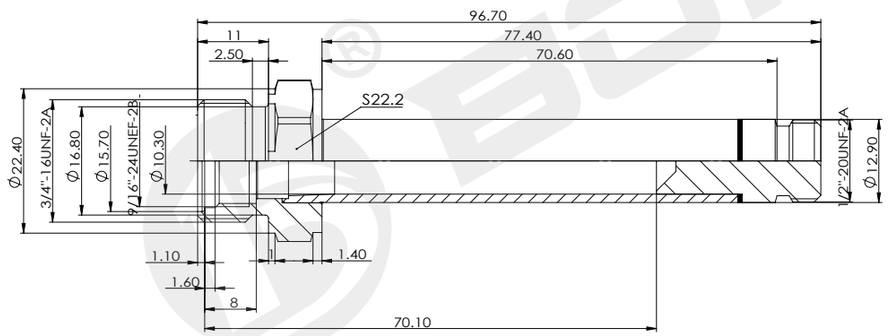

技术参数 /technical parameter					
工作油压 Working oil pressure	MPa	≤ 21	六角尺寸 Hexagon size	mm	22.2

BYT01-S16-01

双向推拉式

Two way push-pull type

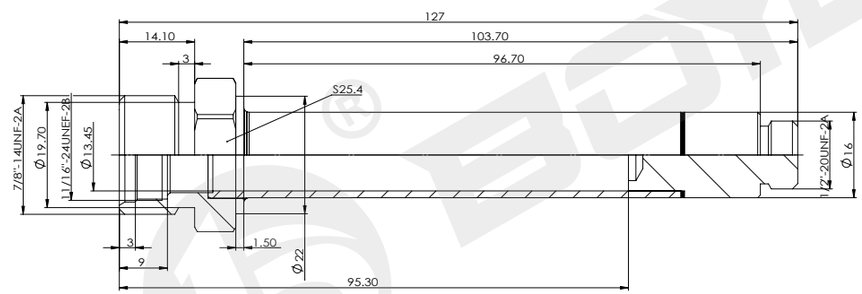

技术参数 /technical parameter					
工作油压 Working oil pressure	MPa	≤ 21	六角尺寸 Hexagon size	mm	25.4

样本数据来源于试验室环境，仅供参考，贵公司如需最新数据或有特殊需求，欢迎联系搏业液压工程师。

The sample data comes from the laboratory environment and is only for reference. If your company needs the latest data or has special needs, please contact Boye hydraulic engineer.

插装阀用导磁套

Magnetic guide tube for cartridge valve

BYT02-13-01

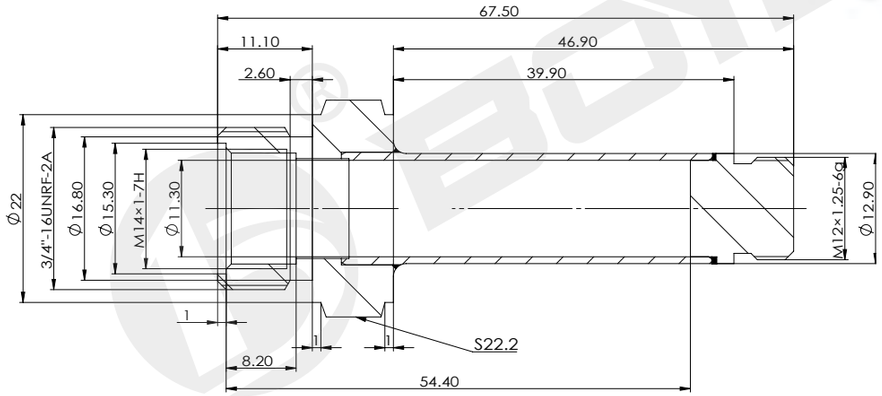

技术参数 /technical parameter					
工作油压 Working oil pressure	MPa	≤ 21	六角尺寸 Hexagon size	mm	22.2

BYT02-13A-01

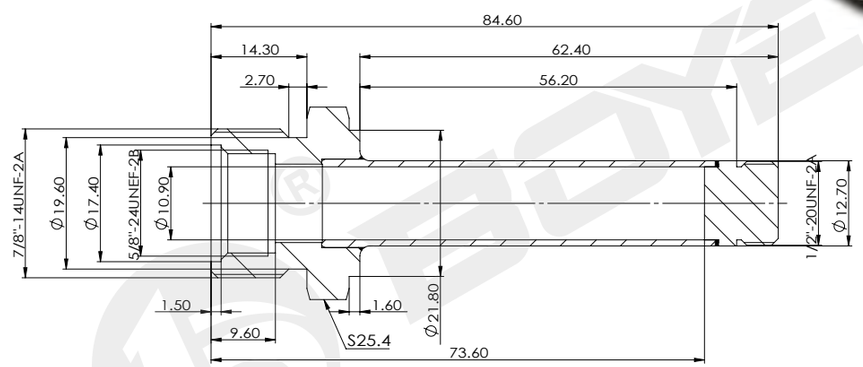

技术参数 /technical parameter					
工作油压 Working oil pressure	MPa	≤ 21	六角尺寸 Hexagon size	mm	25.4

样本数据来源于试验室环境，仅供参考，贵公司如需最新数据或有特殊需求，欢迎联系搏业液压工程师。

The sample data comes from the laboratory environment and is only for reference. If your company needs the latest data or has special needs, please contact Boye hydraulic engineer.

TEL:0574-86587131 www.nbboye.net

插装阀用导磁套

Magnetic guide tube for cartridge valve

BYT02-13B-01

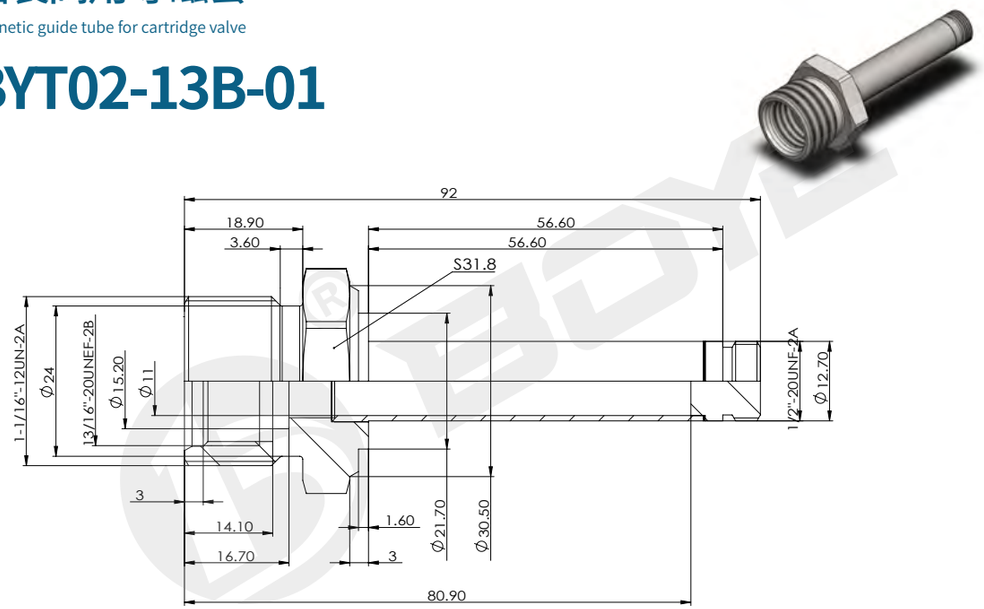

技术参数 /technical parameter					
工作油压 Working oil pressure	MPa	≤ 21	六角尺寸 Hexagon size	mm	31.75

BYT02-13C-01

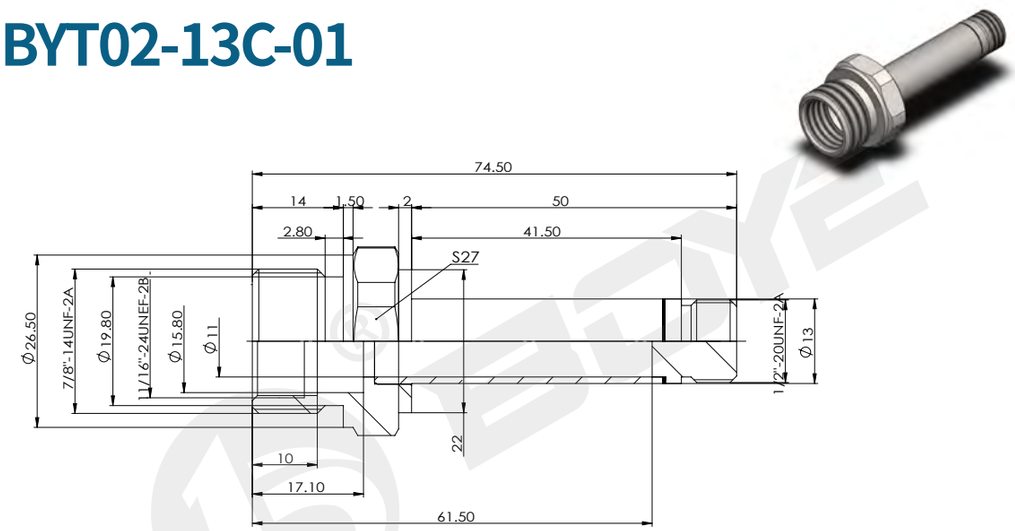

技术参数 /technical parameter					
工作油压 Working oil pressure	MPa	≤ 21	六角尺寸 Hexagon size	mm	27

样本数据来源于试验室环境，仅供参考，贵公司如需最新数据或有特殊需求，欢迎联系搏业液压工程师。

The sample data comes from the laboratory environment and is only for reference. If your company needs the latest data or has special needs, please contact Boye hydraulic engineer.

插装阀用导磁套

Magnetic guide tube for cartridge valve

BYT02-16-01

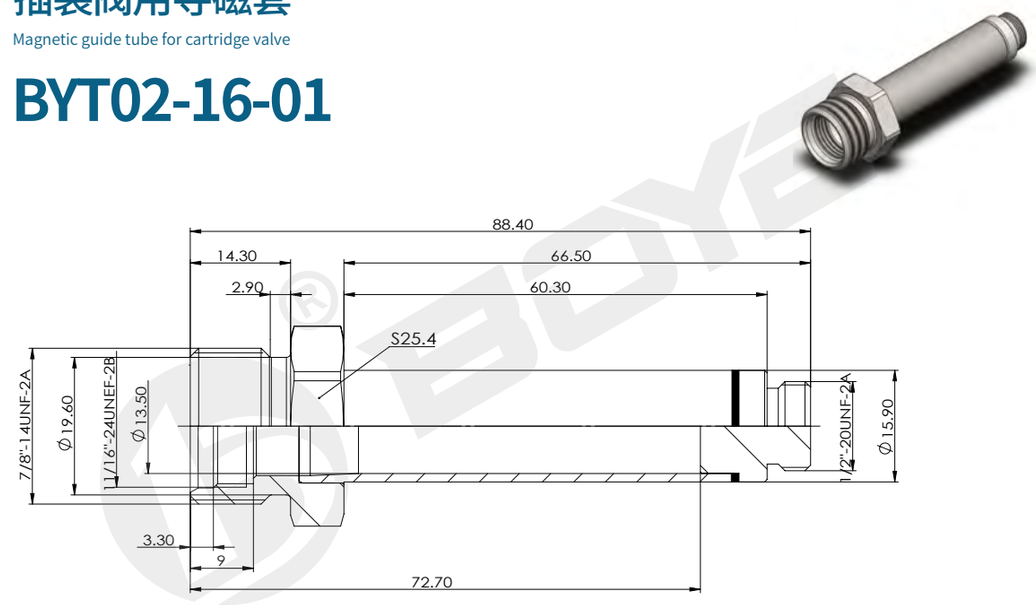

技术参数 /technical parameter					
工作油压 Working oil pressure	MPa	≤ 21	六角尺寸 Hexagon size	mm	25.4

BYT02-16A-01

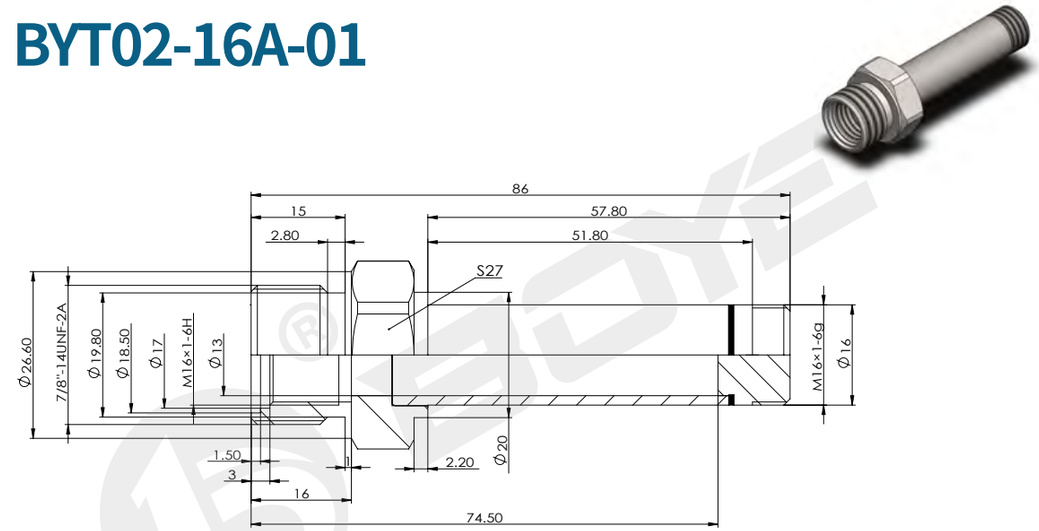

技术参数 /technical parameter					
工作油压 Working oil pressure	MPa	≤ 21	六角尺寸 Hexagon size	mm	27

样本数据来源于试验室环境，仅供参考，贵公司如需最新数据或有特殊需求，欢迎联系搏业液压工程师。

The sample data comes from the laboratory environment and is only for reference. If your company needs the latest data or has special needs, please contact Boye hydraulic engineer.

插装阀用导磁套

Magnetic guide tube for cartridge valve

BYT03-13-01M

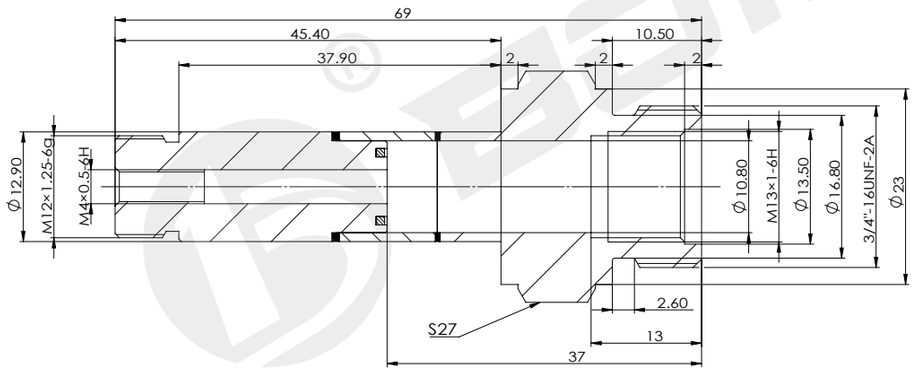

技术参数 /technical parameter					
工作油压 Working oil pressure	MPa	≤ 21	六角尺寸 Hexagon size	mm	27

BYT04-13-01M

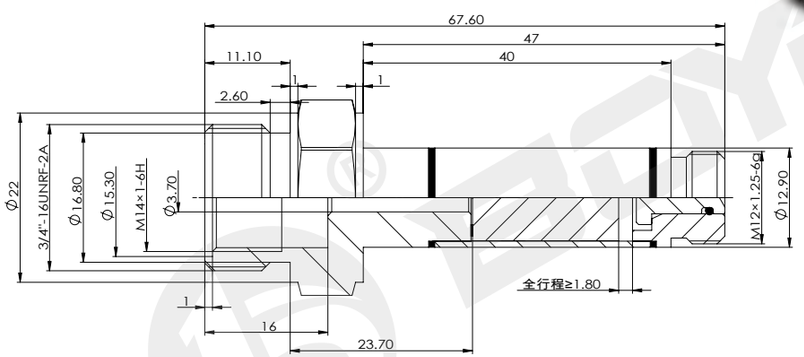

技术参数 /technical parameter					
工作油压 Working oil pressure	MPa	≤ 21	六角尺寸 Hexagon size	mm	22.2

样本数据来源于试验室环境，仅供参考，贵公司如需最新数据或有特殊需求，欢迎联系搏业液压工程师。

The sample data comes from the laboratory environment and is only for reference. If your company needs the latest data or has special needs, please contact Boye hydraulic engineer.

插装阀用导磁套

Magnetic guide tube for cartridge valve

BYT05-13-01

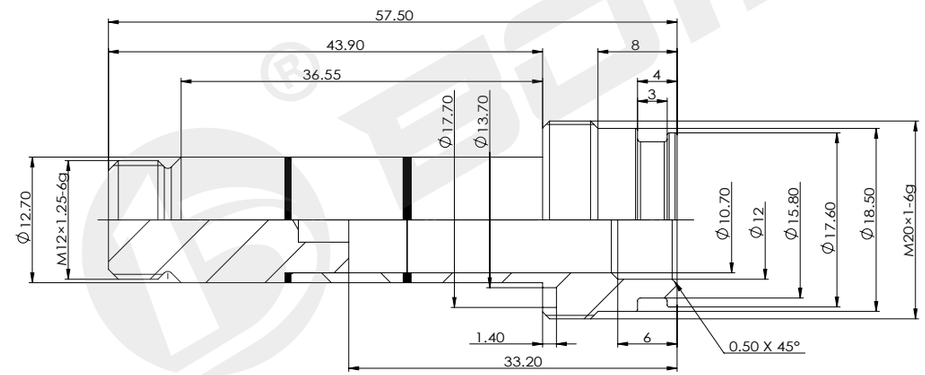

技术参数 /technical parameter					
工作油压 Working oil pressure	MPa	≤ 21	六角尺寸 Hexagon size	mm	— —

BYT05-13-02M

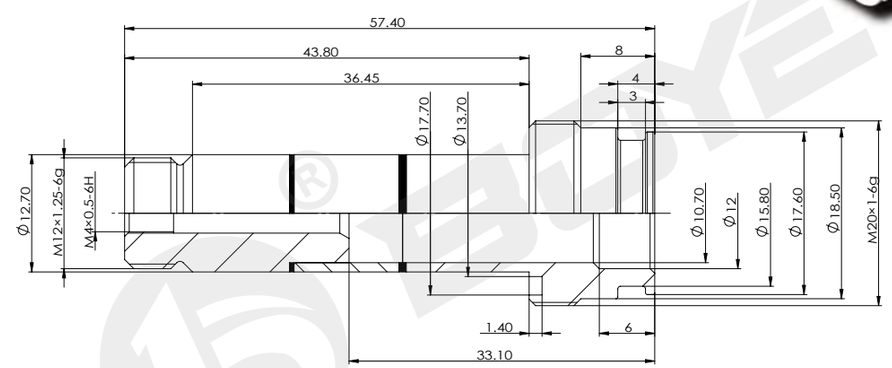

技术参数 /technical parameter					
工作油压 Working oil pressure	MPa	≤ 21	六角尺寸 Hexagon size	mm	— —

样本数据来源于试验室环境，仅供参考，贵公司如需最新数据或有特殊需求，欢迎联系搏业液压工程师。

The sample data comes from the laboratory environment and is only for reference. If your company needs the latest data or has special needs, please contact Boye hydraulic engineer.

www.nbboye.net TEL:0574-86587131

插装阀用导磁套

Magnetic guide tube for cartridge valve

BYT06-13-01

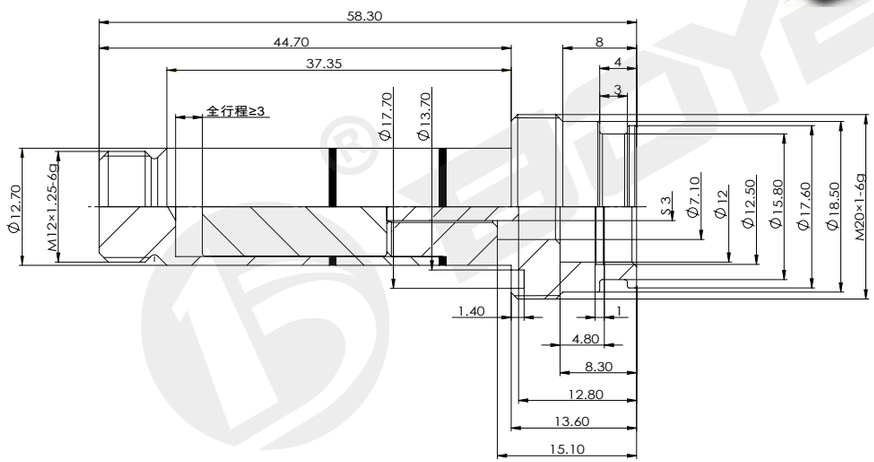

技术参数 /technical parameter					
工作油压 Working oil pressure	MPa	≤ 21	六角尺寸 Hexagon size	mm	— —

BYT06-13-02M

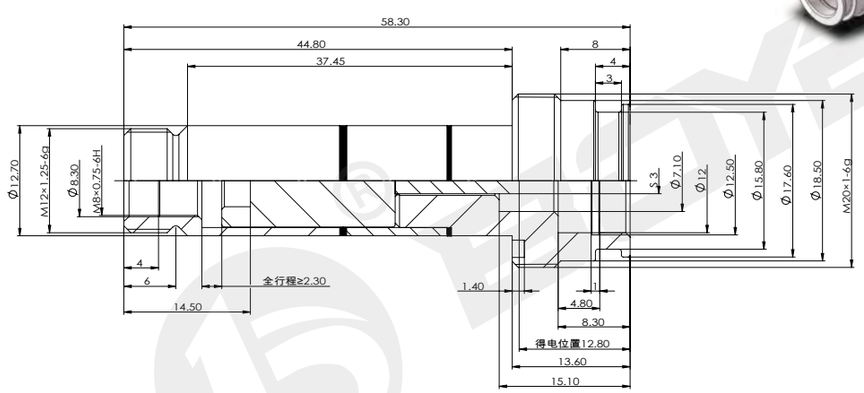

技术参数 /technical parameter					
工作油压 Working oil pressure	MPa	≤ 21	六角尺寸 Hexagon size	mm	— —

样本数据来源于试验室环境，仅供参考，贵公司如需最新数据或有特殊需求，欢迎联系搏业液压工程师。

The sample data comes from the laboratory environment and is only for reference. If your company needs the latest data or has special needs, please contact Boye hydraulic engineer.

插装阀用导磁套

Magnetic guide tube for cartridge valve

BYT07-14-01

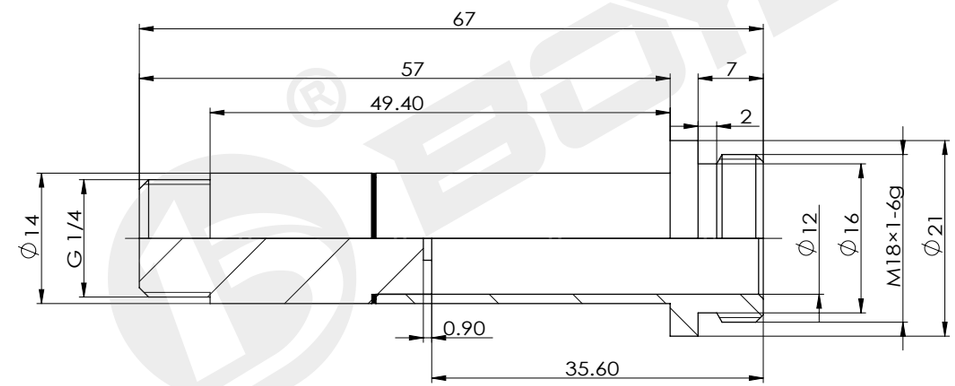

技术参数 /technical parameter					
工作油压 Working oil pressure	MPa	≤ 21	六角尺寸 Hexagon size	mm	— —

BYT07-14-02

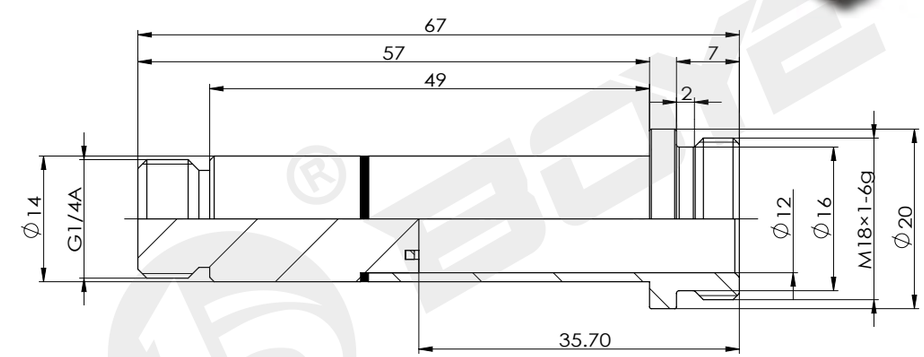

技术参数 /technical parameter					
工作油压 Working oil pressure	MPa	≤ 21	六角尺寸 Hexagon size	mm	— —

样本数据来源于试验室环境，仅供参考，贵公司如需最新数据或有特殊需求，欢迎联系搏业液压工程师。

The sample data comes from the laboratory environment and is only for reference. If your company needs the latest data or has special needs, please contact Boye hydraulic engineer.

插装阀用导磁套

Magnetic guide tube for cartridge valve

BYT09-16-01

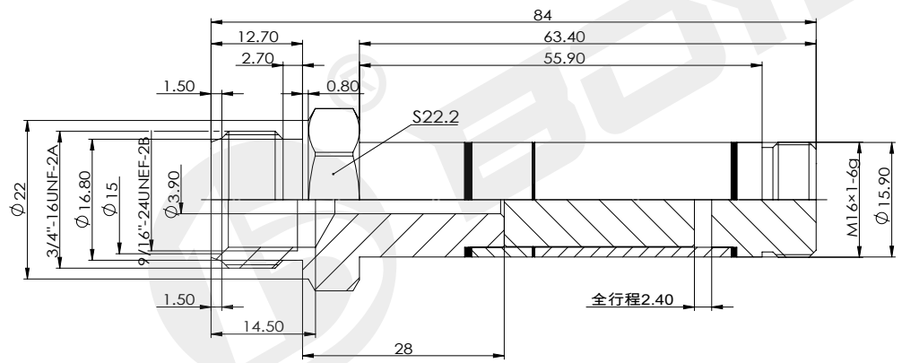

技术参数 /technical parameter					
工作油压 Working oil pressure	MPa	≤ 21	六角尺寸 Hexagon size	mm	22.2

BYT09-16-01M

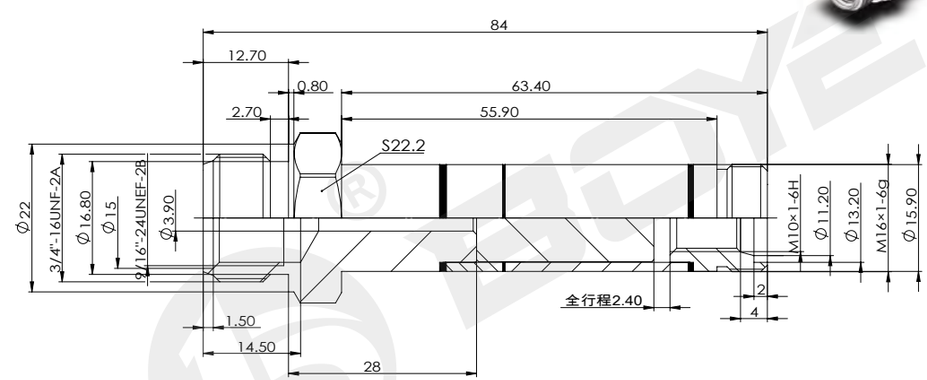

技术参数 /technical parameter					
工作油压 Working oil pressure	MPa	≤ 21	六角尺寸 Hexagon size	mm	S22.2

样本数据来源于试验室环境，仅供参考，贵公司如需最新数据或有特殊需求，欢迎联系搏业液压工程师。

The sample data comes from the laboratory environment and is only for reference. If your company needs the latest data or has special needs, please contact Boye hydraulic engineer.

插装阀用导磁套

Magnetic guide tube for cartridge valve

BYT10-S13-01M

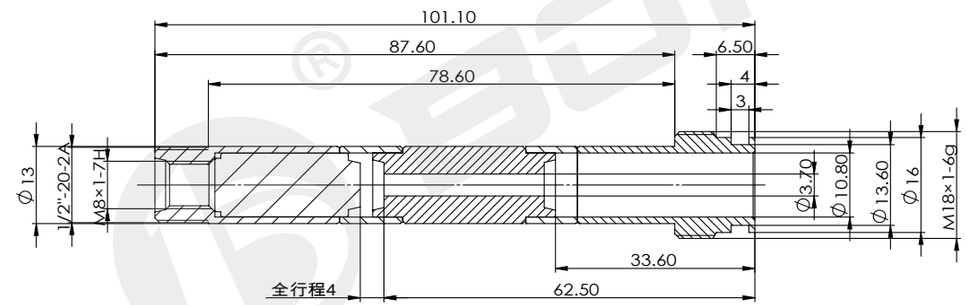

技术参数 /technical parameter					
工作油压 Working oil pressure	MPa	≤ 21	六角尺寸 Hexagon size	mm	— —

BYT10-S16-01M

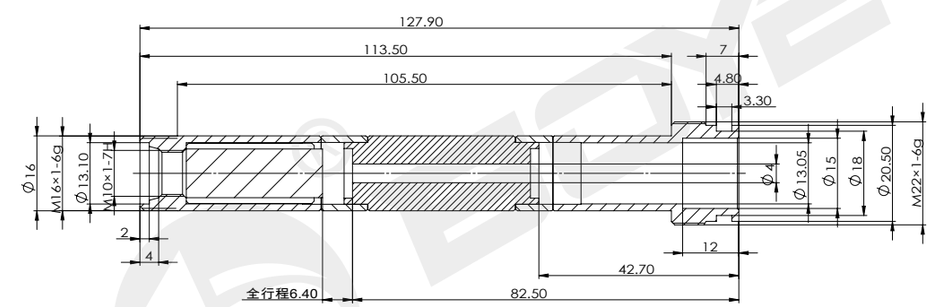

技术参数 /technical parameter					
工作油压 Working oil pressure	MPa	≤ 21	六角尺寸 Hexagon size	mm	— —

样本数据来源于试验室环境，仅供参考，贵公司如需最新数据或有特殊需求，欢迎联系搏业液压工程师。

The sample data comes from the laboratory environment and is only for reference. If your company needs the latest data or has special needs, please contact Boye hydraulic engineer.

TEL:0574-86587131 www.nbboye.net

插装阀用导磁套

Magnetic guide tube for cartridge valve

BYT11-13-01

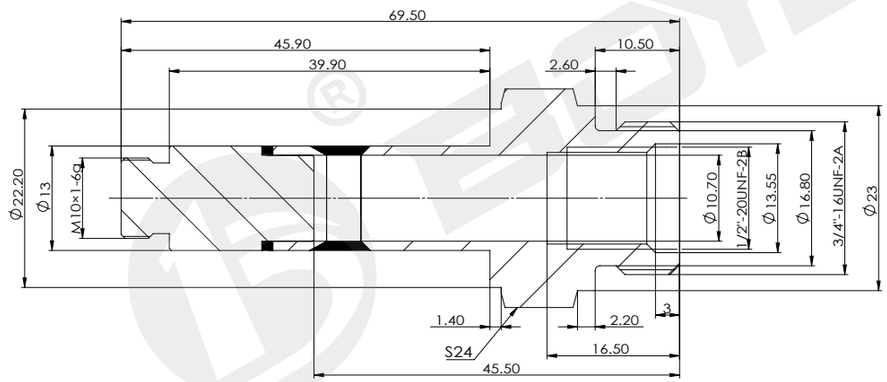

技术参数 /technical parameter					
工作油压 Working oil pressure	MPa	≤ 21	六角尺寸 Hexagon size	mm	24

BYT11-13-04M

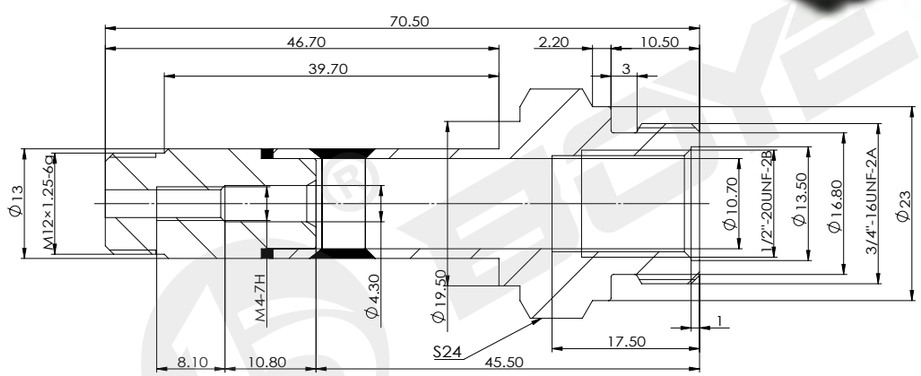

技术参数 /technical parameter					
工作油压 Working oil pressure	MPa	≤ 21	六角尺寸 Hexagon size	mm	24

样本数据来源于试验室环境，仅供参考，贵公司如需最新数据或有特殊需求，欢迎联系搏业液压工程师。

The sample data comes from the laboratory environment and is only for reference. If your company needs the latest data or has special needs, please contact Boye hydraulic engineer.

插装阀用导磁套

Magnetic guide tube for cartridge valve

BYT11-13A-01

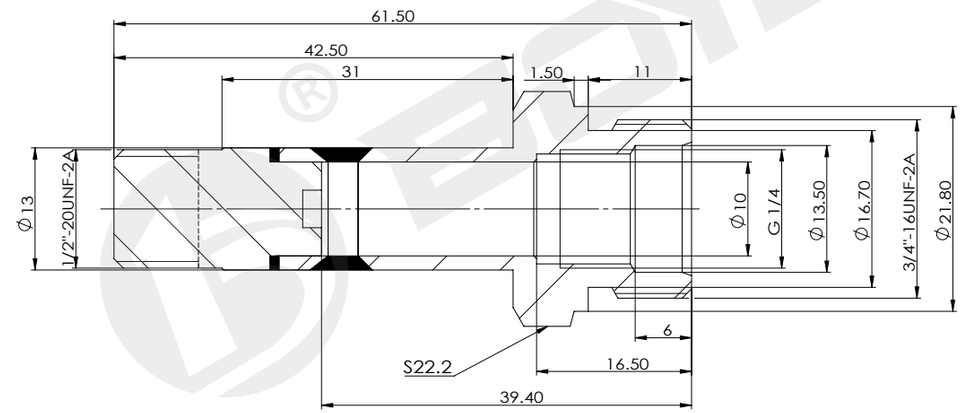

技术参数 /technical parameter					
工作油压 Working oil pressure	MPa	≤ 21	六角尺寸 Hexagon size	mm	22.2

BYT11-13A-03M

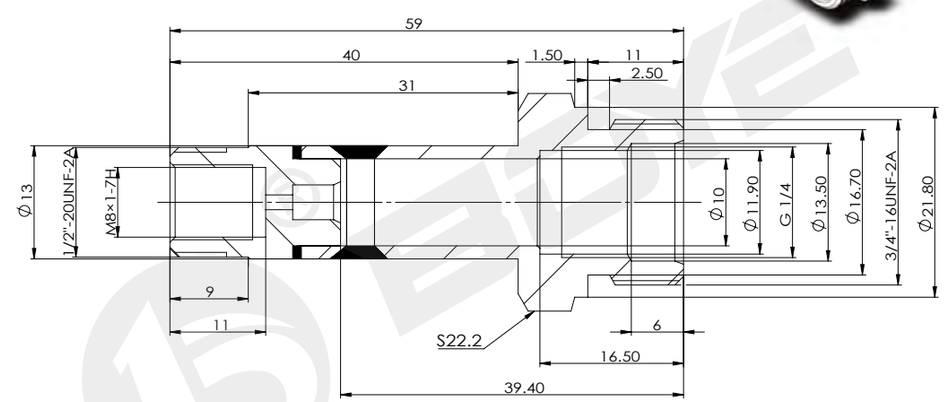

技术参数 /technical parameter					
工作油压 Working oil pressure	MPa	≤ 21	六角尺寸 Hexagon size	mm	22.2

样本数据来源于试验室环境，仅供参考，贵公司如需最新数据或有特殊需求，欢迎联系搏业液压工程师。

The sample data comes from the laboratory environment and is only for reference. If your company needs the latest data or has special needs, please contact Boye hydraulic engineer.

www.nbboye.net TEL:0574-86587131

插装阀用导磁套

Magnetic guide tube for cartridge valve

BYT11-16-01

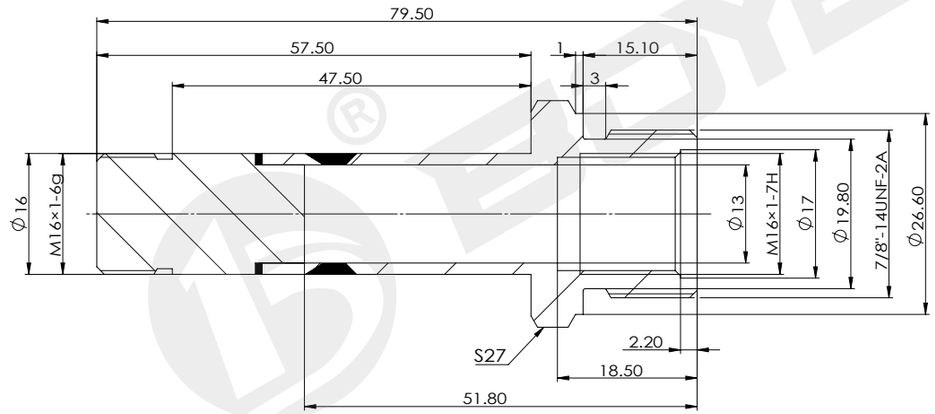

技术参数 /technical parameter					
工作油压 Working oil pressure	MPa	≤ 21	六角尺寸 Hexagon size	mm	27

BYT11-16-01M

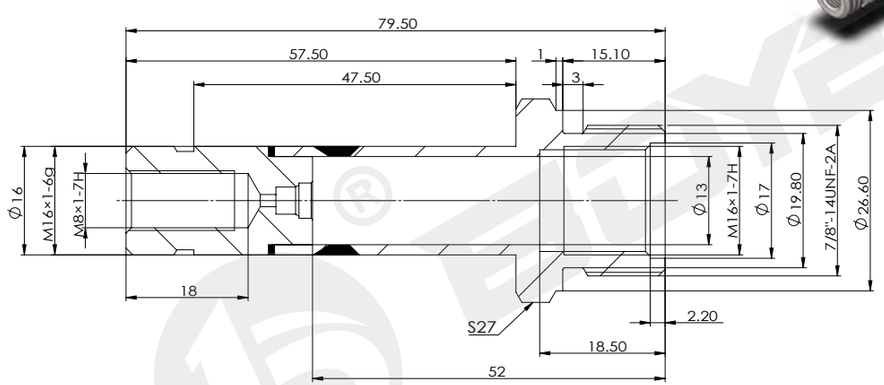

技术参数 /technical parameter					
工作油压 Working oil pressure	MPa	≤ 21	六角尺寸 Hexagon size	mm	27

样本数据来源于试验室环境，仅供参考，贵公司如需最新数据或有特殊需求，欢迎联系搏业液压工程师。
The sample data comes from the laboratory environment and is only for reference. If your company needs the latest data or has special needs, please contact Boye hydraulic engineer.

插装阀用导磁套

Magnetic guide tube for cartridge valve

BYT012-13-01

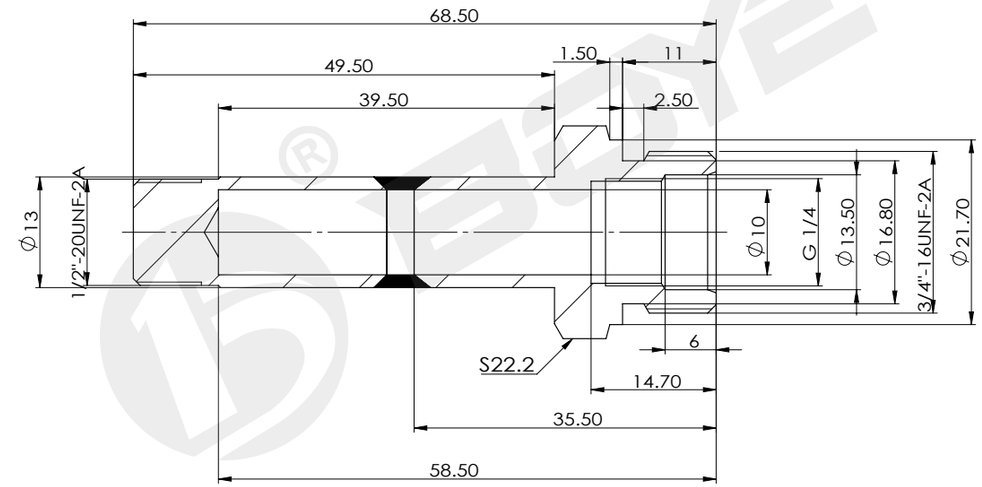

技术参数 /technical parameter					
工作油压 Working oil pressure	MPa	≤ 21	六角尺寸 Hexagon size	mm	22.2

BYT12-14-01

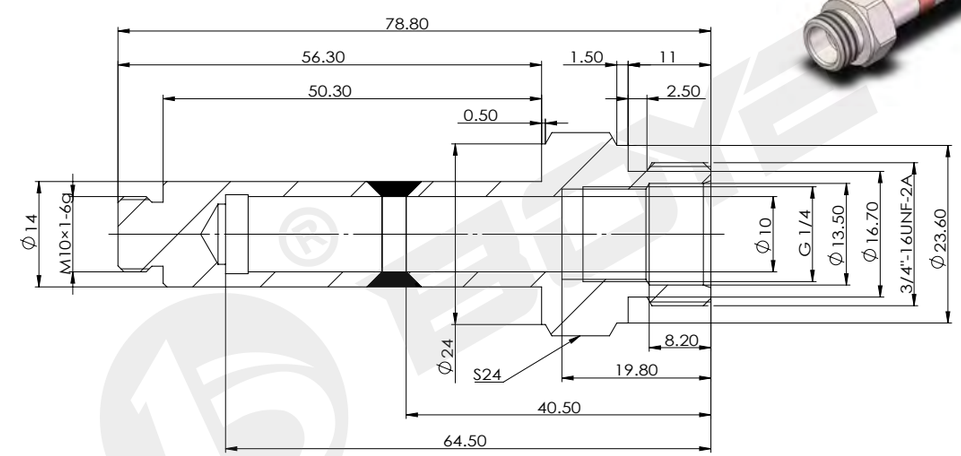

技术参数 /technical parameter					
工作油压 Working oil pressure	MPa	≤ 21	六角尺寸 Hexagon size	mm	24

样本数据来源于试验室环境，仅供参考，贵公司如需最新数据或有特殊需求，欢迎联系搏业液压工程师。
The sample data comes from the laboratory environment and is only for reference. If your company needs the latest data or has special needs, please contact Boye hydraulic engineer.

www.nbboye.net TEL:0574-86587131

插装阀用导磁套

Magnetic guide tube for cartridge valve

BYT12-16-01M

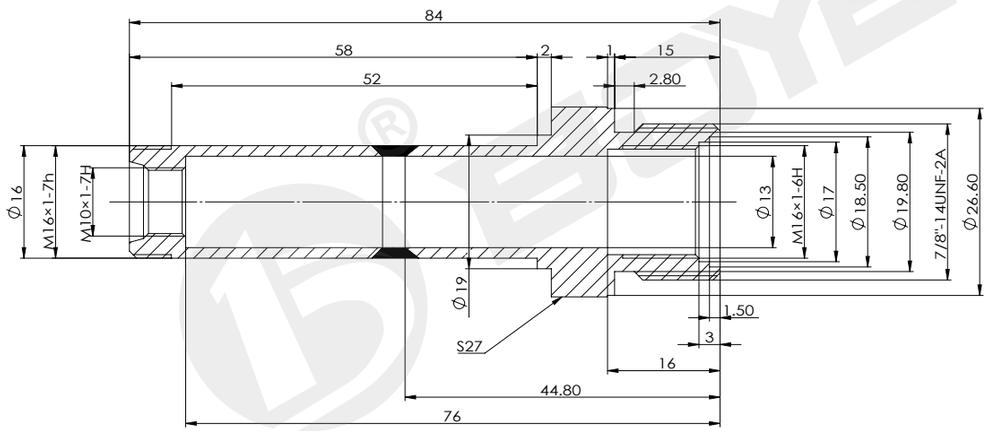

技术参数 /technical parameter					
工作油压 Working oil pressure	MPa	≤ 21	六角尺寸 Hexagon size	mm	27

BYT12-16-02

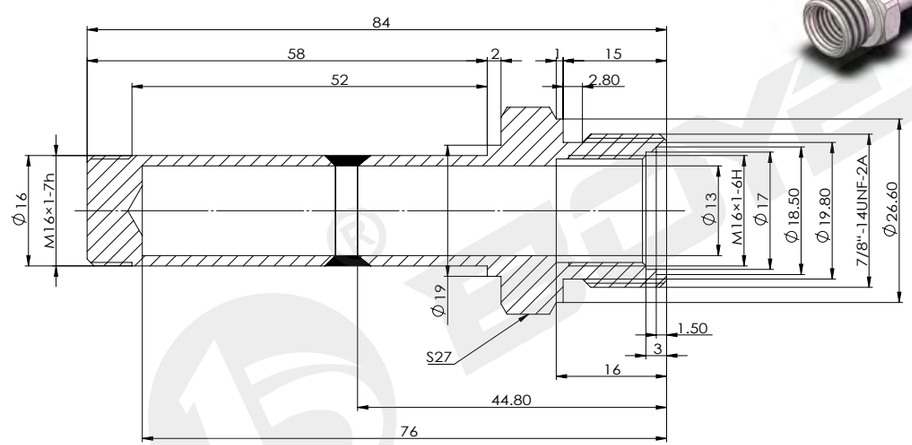

技术参数 /technical parameter					
工作油压 Working oil pressure	MPa	≤ 21	六角尺寸 Hexagon size	mm	27

样本数据来源于试验室环境，仅供参考，贵公司如需最新数据或有特殊需求，欢迎联系搏业液压工程师。

The sample data comes from the laboratory environment and is only for reference. If your company needs the latest data or has special needs, please contact Boye hydraulic engineer.

插装阀用导磁套

Magnetic guide tube for cartridge valve

BYT13-13-01

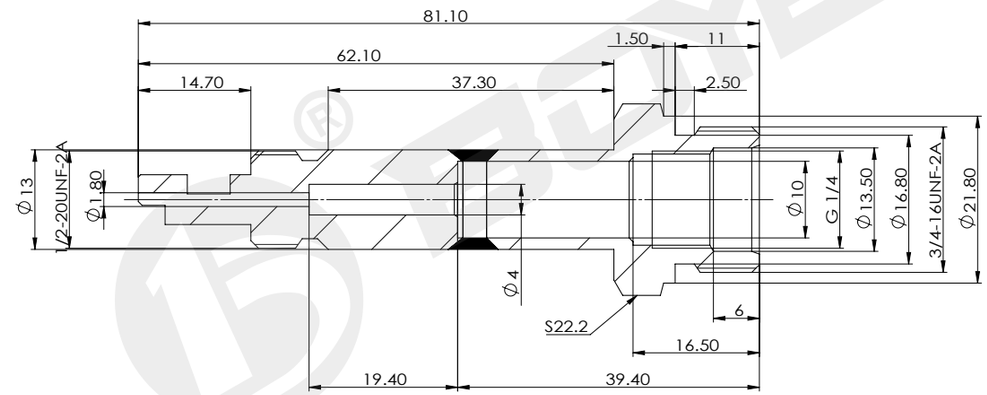

技术参数 /technical parameter					
工作油压 Working oil pressure	MPa	≤ 21	六角尺寸 Hexagon size	mm	22.2

BYT14-13-01M

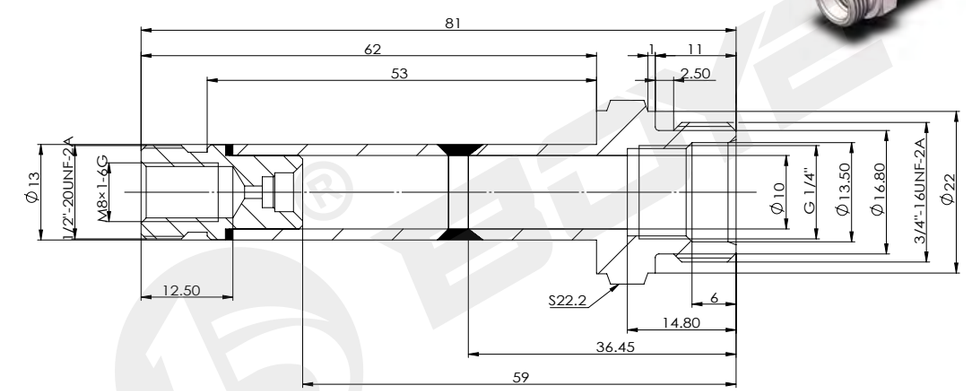

技术参数 /technical parameter					
工作油压 Working oil pressure	MPa	≤ 21	六角尺寸 Hexagon size	mm	22.2

样本数据来源于试验室环境，仅供参考，贵公司如需最新数据或有特殊需求，欢迎联系搏业液压工程师。

The sample data comes from the laboratory environment and is only for reference. If your company needs the latest data or has special needs, please contact Boye hydraulic engineer.

www.nbboye.net TEL:0574-86587131

插装阀用导磁套

Magnetic guide tube for cartridge valve

BYT15-16-01

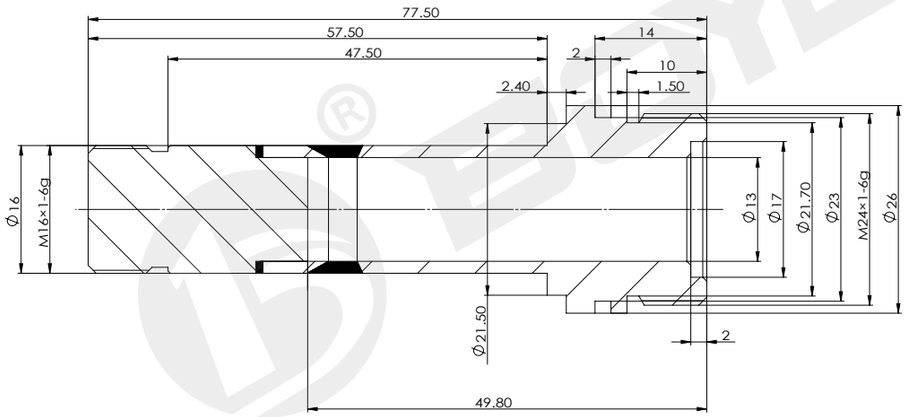

技术参数 /technical parameter					
工作油压 Working oil pressure	MPa	≤ 21	六角尺寸 Hexagon size	mm	— —

BYT16-13-01

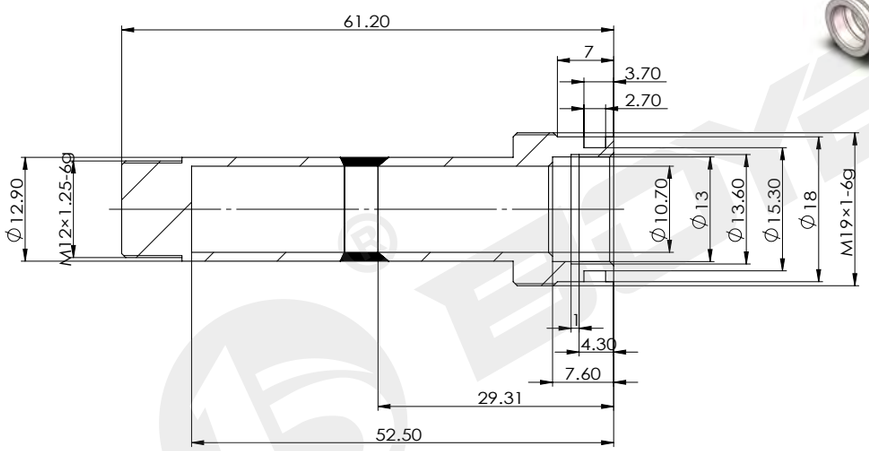

技术参数 /technical parameter					
工作油压 Working oil pressure	MPa	≤ 21	六角尺寸 Hexagon size	mm	— —

样本数据来源于试验室环境，仅供参考，贵公司如需最新数据或有特殊需求，欢迎联系搏业液压工程师。

The sample data comes from the laboratory environment and is only for reference. If your company needs the latest data or has special needs, please contact Boye hydraulic engineer.

插装阀用导磁套

Magnetic guide tube for cartridge valve

BYT16-13-01M

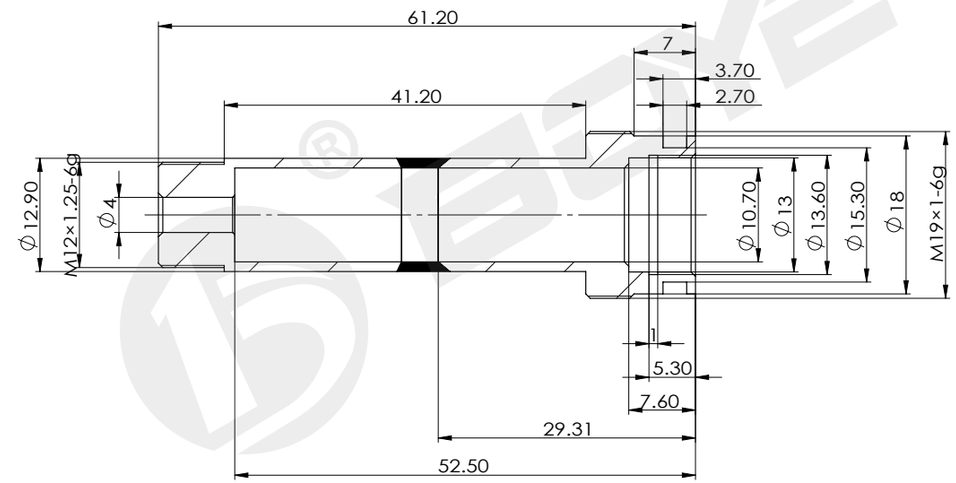

技术参数 /technical parameter					
工作油压 Working oil pressure	MPa	≤ 21	六角尺寸 Hexagon size	mm	— —

BYT16-16-03M

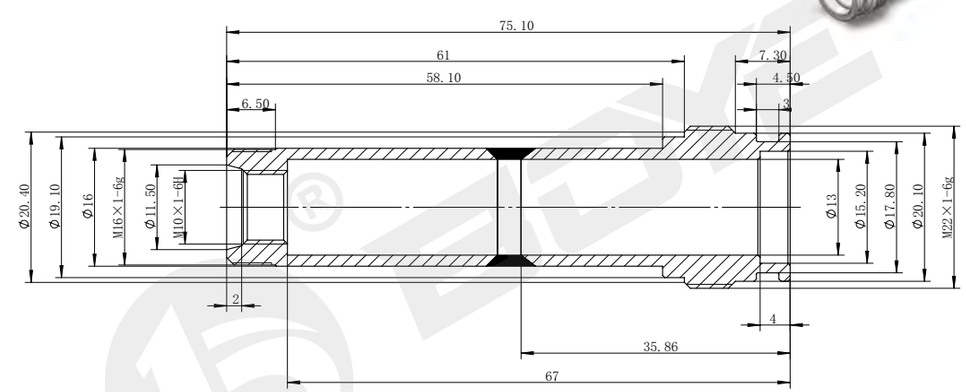

技术参数 /technical parameter					
工作油压 Working oil pressure	MPa	≤ 21	六角尺寸 Hexagon size	mm	— —

样本数据来源于试验室环境，仅供参考，贵公司如需最新数据或有特殊需求，欢迎联系搏业液压工程师。

The sample data comes from the laboratory environment and is only for reference. If your company needs the latest data or has special needs, please contact Boye hydraulic engineer.

www.nbboye.net TEL:0574-86587131

插装阀用导磁套

Magnetic guide tube for cartridge valve

BYT17-16-01

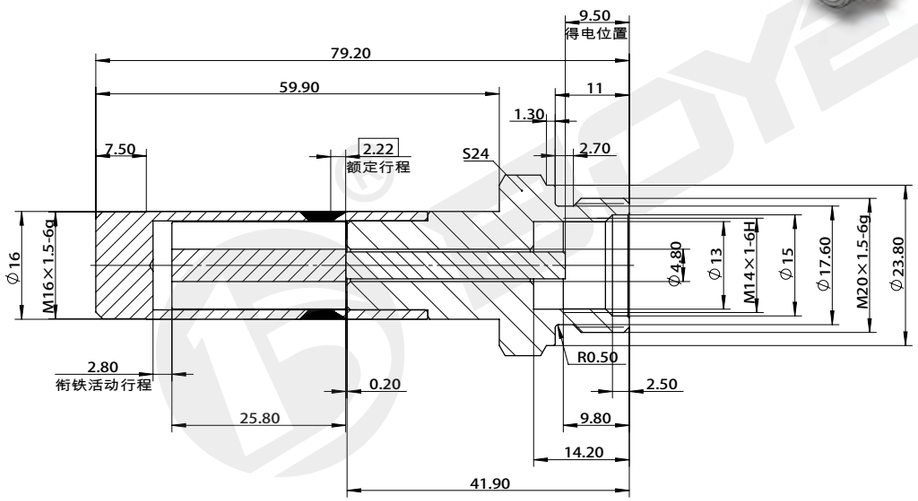

技术参数 /technical parameter					
工作油压 Working oil pressure	MPa	≤ 21	六角尺寸 Hexagon size	mm	— —

BYT18-16-01

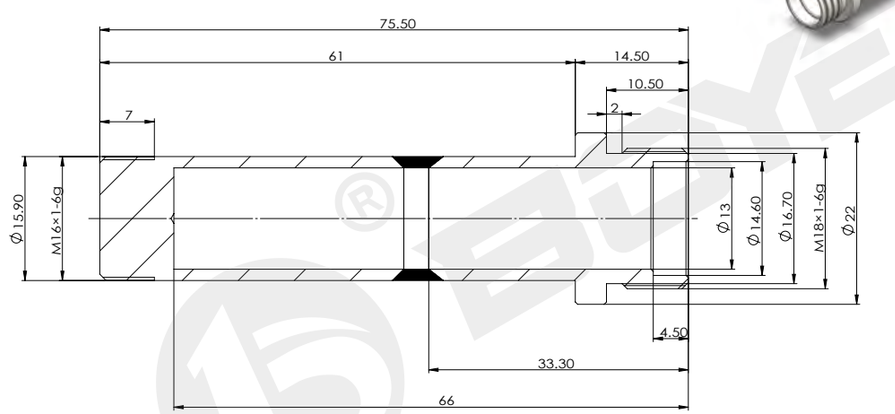

技术参数 /technical parameter					
工作油压 Working oil pressure	MPa	≤ 21	六角尺寸 Hexagon size	mm	— —

样本数据来源于试验室环境，仅供参考，贵公司如需最新数据或有特殊需求，欢迎联系搏业液压工程师。

The sample data comes from the laboratory environment and is only for reference. If your company needs the latest data or has special needs, please contact Boye hydraulic engineer.

插装阀用导磁套

Magnetic guide tube for cartridge valve

BYT18-16-01M

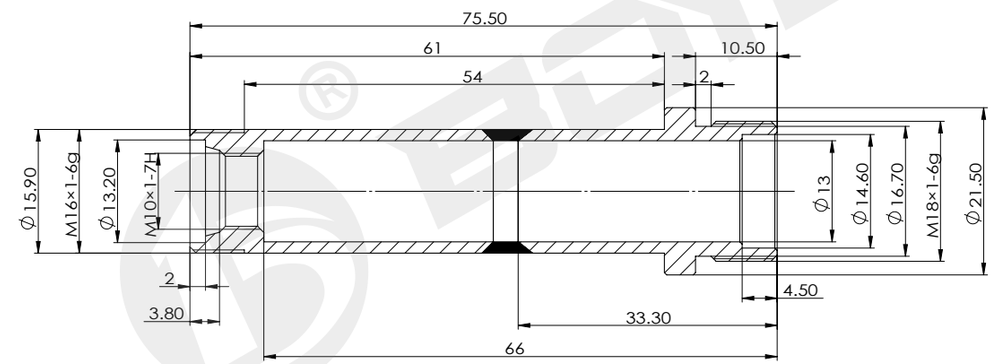

技术参数 /technical parameter					
工作油压 Working oil pressure	MPa	≤ 21	六角尺寸 Hexagon size	mm	— —

BYT18-19-01

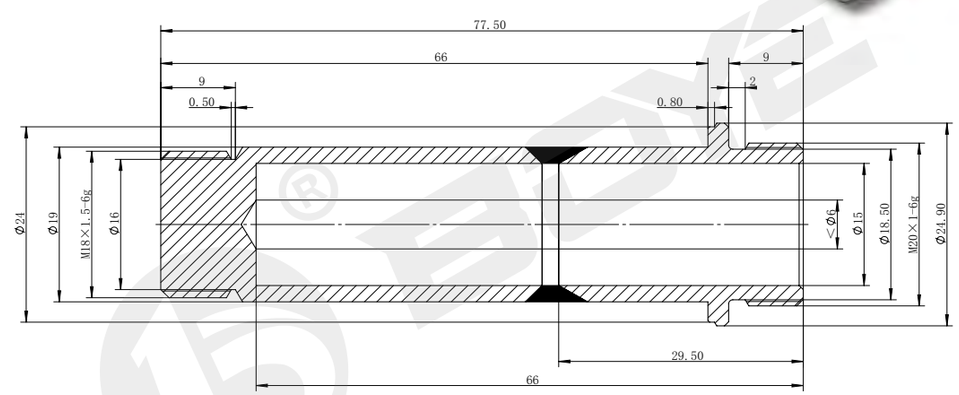

技术参数 /technical parameter					
工作油压 Working oil pressure	MPa	≤ 35	六角尺寸 Hexagon size	mm	— —

样本数据来源于试验室环境，仅供参考，贵公司如需最新数据或有特殊需求，欢迎联系搏业液压工程师。

The sample data comes from the laboratory environment and is only for reference. If your company needs the latest data or has special needs, please contact Boye hydraulic engineer.

www.nbboye.net TEL:0574-86587131

插装阀用导磁套

Magnetic guide tube for cartridge valve

BYT18-19-02

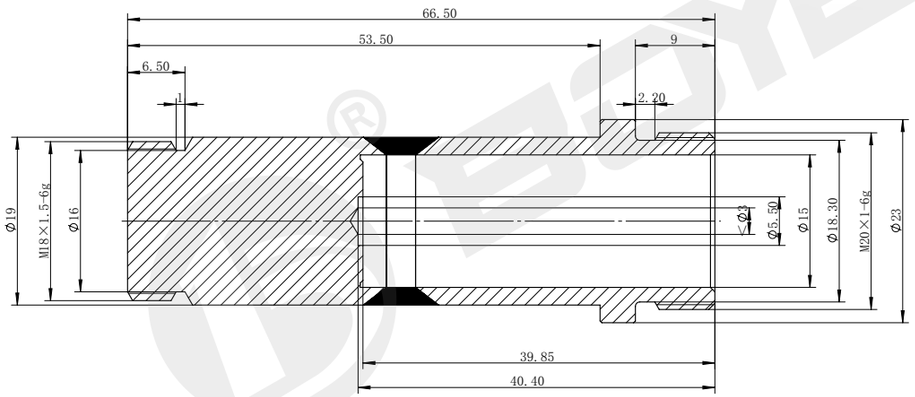

技术参数 /technical parameter					
工作油压 Working oil pressure	MPa	≤ 21	六角尺寸 Hexagon size	mm	— —

BYT19-23-01

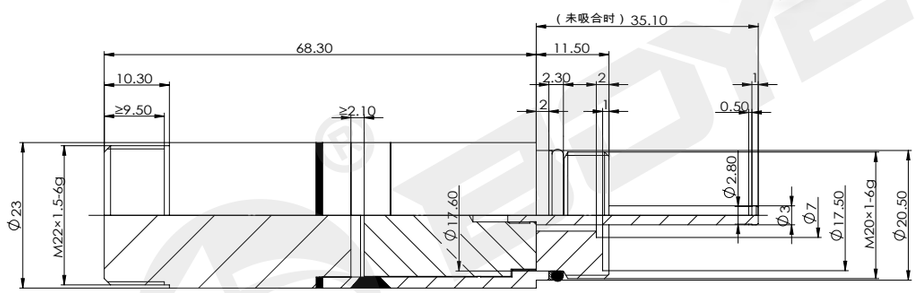

技术参数 /technical parameter					
工作油压 Working oil pressure	MPa	≤ 21	六角尺寸 Hexagon size	mm	— —

样本数据来源于试验室环境，仅供参考，贵公司如需最新数据或有特殊需求，欢迎联系搏业液压工程师。

The sample data comes from the laboratory environment and is only for reference. If your company needs the latest data or has special needs, please contact Boye hydraulic engineer.

插装阀用导磁套

Magnetic guide tube for cartridge valve

BYT20-18-01

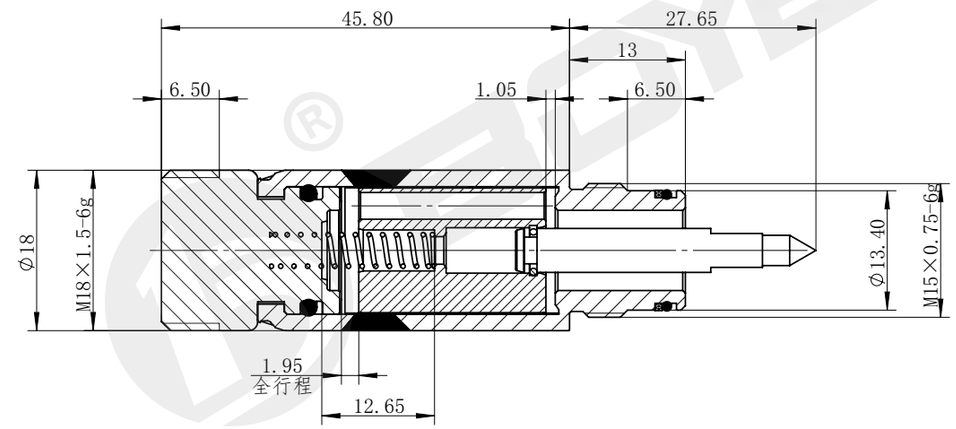

技术参数 /technical parameter					
工作油压 Working oil pressure	MPa	≤ 21	六角尺寸 Hexagon size	mm	— —

BYT20-18-01M

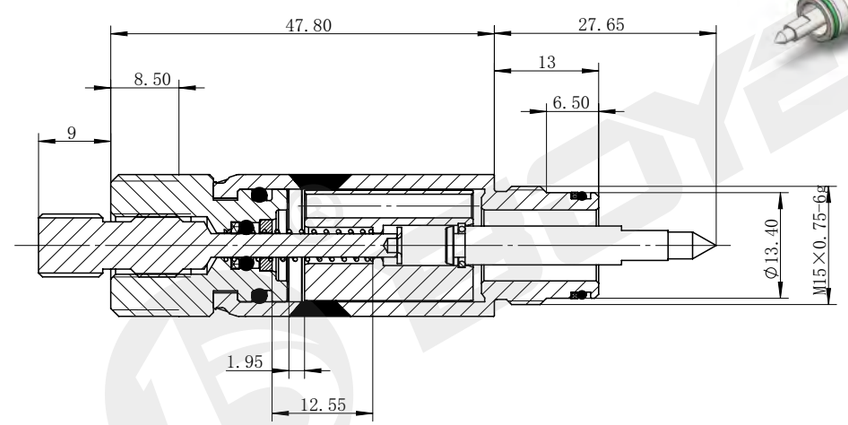

技术参数 /technical parameter					
工作油压 Working oil pressure	MPa	≤ 21	六角尺寸 Hexagon size	mm	— —

样本数据来源于试验室环境，仅供参考，贵公司如需最新数据或有特殊需求，欢迎联系搏业液压工程师。

The sample data comes from the laboratory environment and is only for reference. If your company needs the latest data or has special needs, please contact Boye hydraulic engineer.

插装阀用导磁套

Magnetic guide tube for cartridge valve

BYT23-13-01

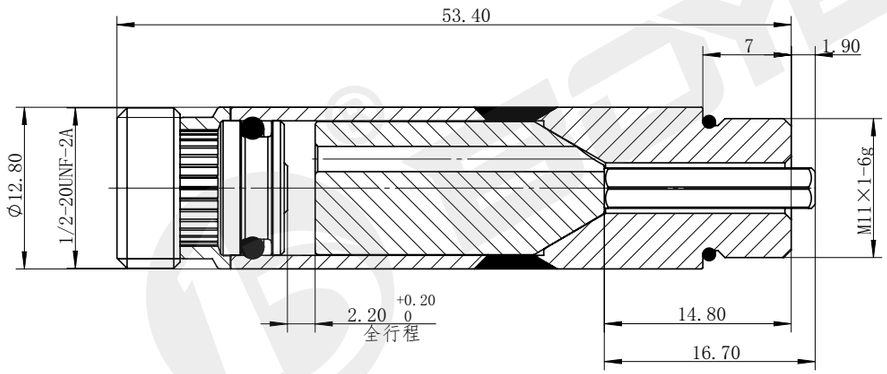

技术参数 /technical parameter					
工作油压 Working oil pressure	MPa	≤ 21	六角尺寸 Hexagon size	mm	— —

BYT24-16-01M

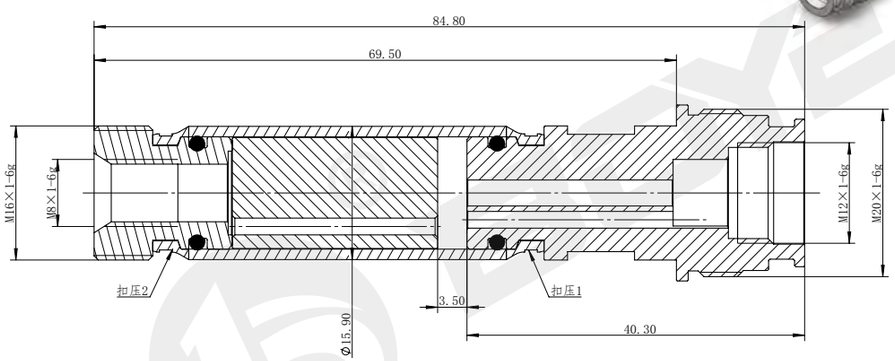

技术参数 /technical parameter					
工作油压 Working oil pressure	MPa	≤ 25	六角尺寸 Hexagon size	mm	— —

样本数据来源于试验室环境，仅供参考，贵公司如需最新数据或有特殊需求，欢迎联系搏业液压工程师。

The sample data comes from the laboratory environment and is only for reference. If your company needs the latest data or has special needs, please contact Boye hydraulic engineer.

插装阀用导磁套

Magnetic guide tube for cartridge valve

BYT25-13-01

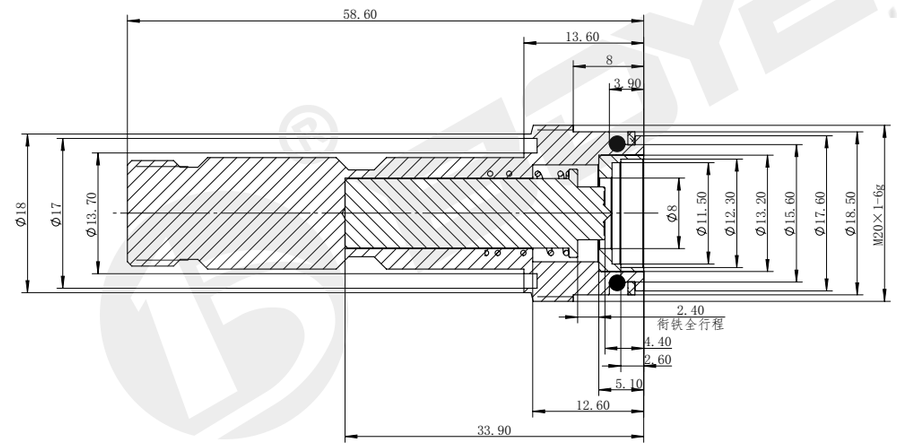

技术参数 /technical parameter					
工作油压 Working oil pressure	MPa	≤ 21	六角尺寸 Hexagon size	mm	— —

BYT26-13-01

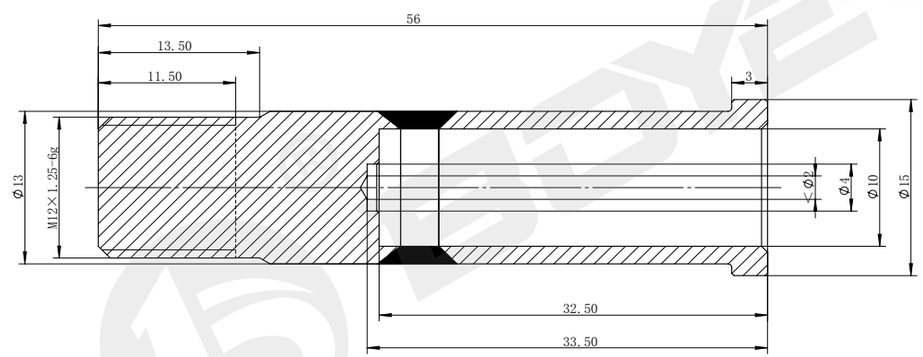

技术参数 /technical parameter					
工作油压 Working oil pressure	MPa	≤ 21	六角尺寸 Hexagon size	mm	— —

样本数据来源于试验室环境，仅供参考，贵公司如需最新数据或有特殊需求，欢迎联系搏业液压工程师。

The sample data comes from the laboratory environment and is only for reference. If your company needs the latest data or has special needs, please contact Boye hydraulic engineer.

www.nbboye.net TEL:0574-86587131

插装阀用导磁套

Magnetic guide tube for cartridge valve

BYT27-13-01M

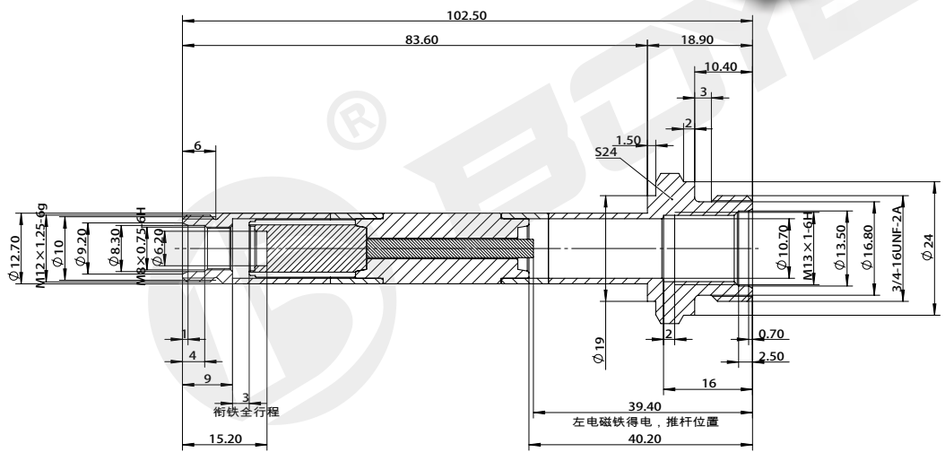

技术参数 /technical parameter					
工作油压 Working oil pressure	MPa	≤ 35	六角尺寸 Hexagon size	mm	S24

BYT27-16-01M

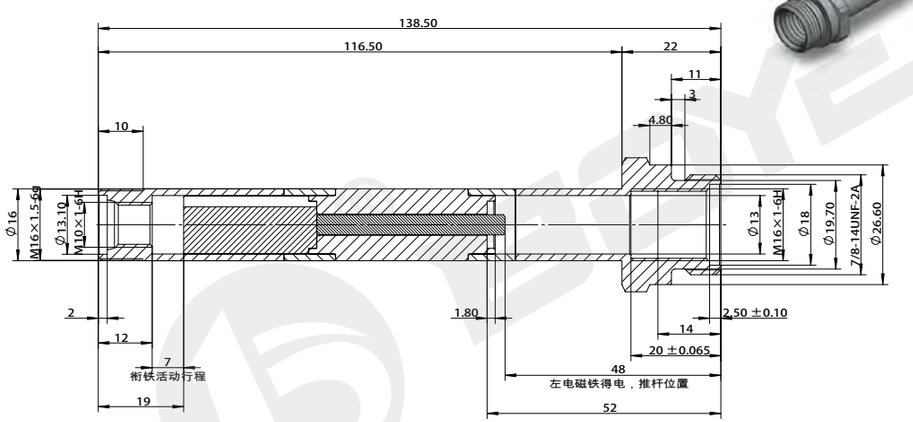

技术参数 /technical parameter					
工作油压 Working oil pressure	MPa	≤ 35	六角尺寸 Hexagon size	mm	S27

样本数据来源于试验室环境，仅供参考，贵公司如需最新数据或有特殊需求，欢迎联系搏业液压工程师。
The sample data comes from the laboratory environment and is only for reference. If your company needs the latest data or has special needs, please contact Boye hydraulic engineer.

插装阀用导磁套

Magnetic guide tube for cartridge valve

BYT28-19-01M

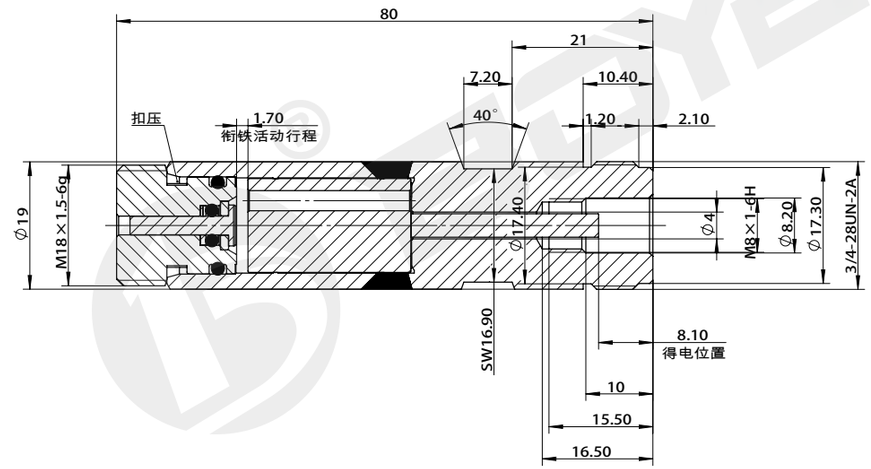

技术参数 /technical parameter					
工作油压 Working oil pressure	MPa	≤ 50	六角尺寸 Hexagon size	mm	— —

BYT28-19-02M

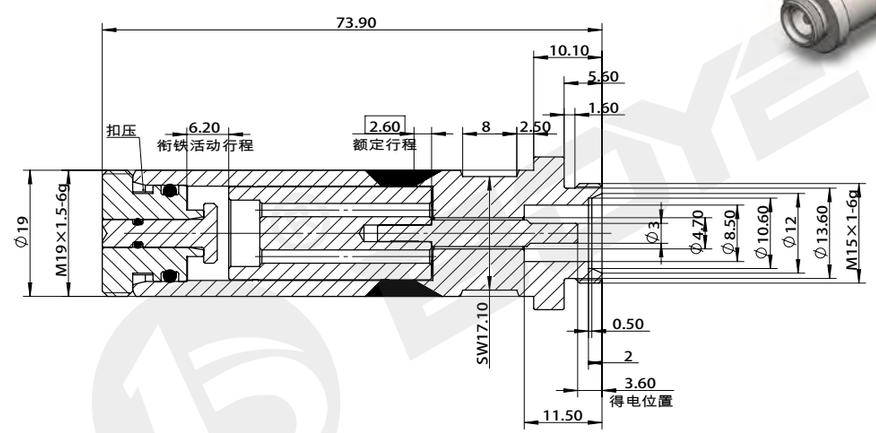

技术参数 /technical parameter					
工作油压 Working oil pressure	MPa	≤ 50	六角尺寸 Hexagon size	mm	— —

样本数据来源于试验室环境，仅供参考，贵公司如需最新数据或有特殊需求，欢迎联系搏业液压工程师。
The sample data comes from the laboratory environment and is only for reference. If your company needs the latest data or has special needs, please contact Boye hydraulic engineer.

插装阀用导磁套

Magnetic guide tube for cartridge valve

BYT28-19-03M

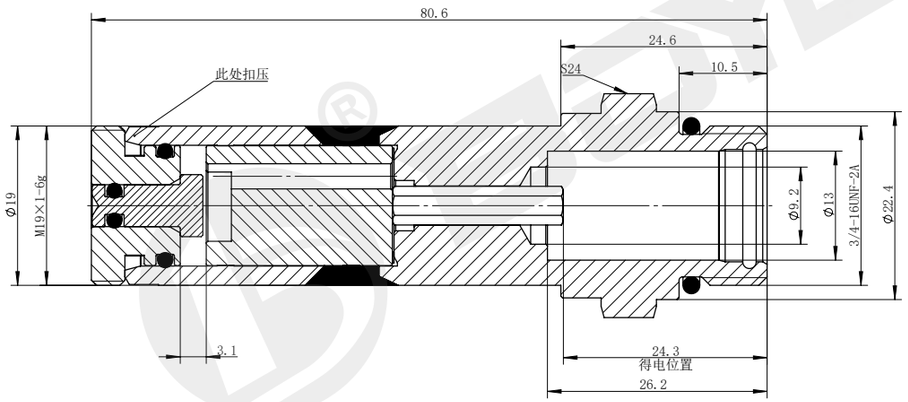

技术参数 /technical parameter					
工作油压 Working oil pressure	MPa	≤ 35	六角尺寸 Hexagon size	mm	24

BYT29-13-01

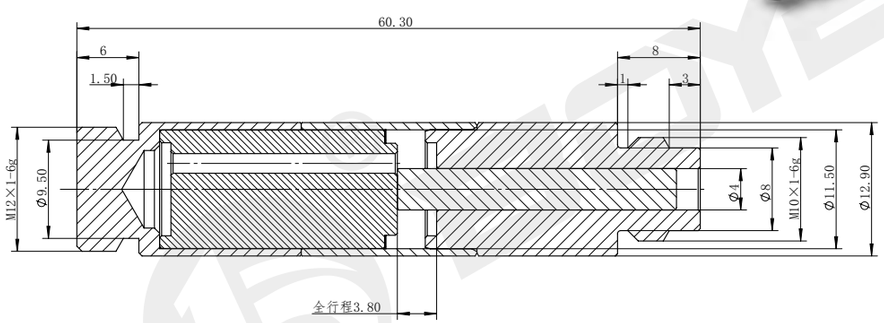

技术参数 /technical parameter					
工作油压 Working oil pressure	MPa	≤ 21	六角尺寸 Hexagon size	mm	— —

样本数据来源于试验室环境，仅供参考，贵公司如需最新数据或有特殊需求，欢迎联系搏业液压工程师。

The sample data comes from the laboratory environment and is only for reference. If your company needs the latest data or has special needs, please contact Boye hydraulic engineer.

插装阀用导磁套

Magnetic guide tube for cartridge valve

BYT30-16-01

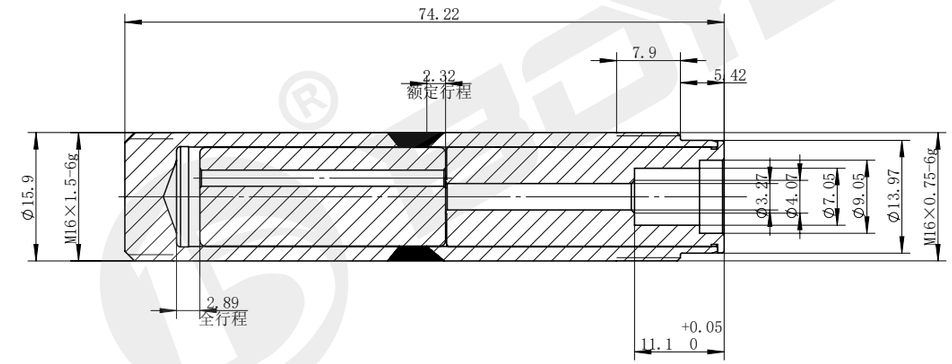

技术参数 /technical parameter					
工作油压 Working oil pressure	MPa	≤ 35	六角尺寸 Hexagon size	mm	— —

BYT30-16-01M

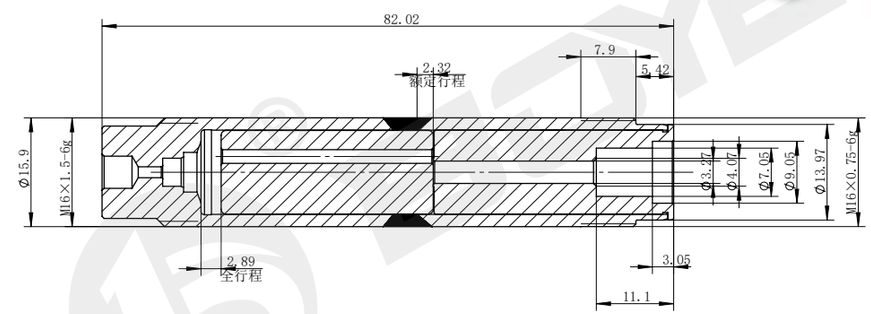

技术参数 /technical parameter					
工作油压 Working oil pressure	MPa	≤ 35	六角尺寸 Hexagon size	mm	— —

样本数据来源于试验室环境，仅供参考，贵公司如需最新数据或有特殊需求，欢迎联系搏业液压工程师。

The sample data comes from the laboratory environment and is only for reference. If your company needs the latest data or has special needs, please contact Boye hydraulic engineer.

TEL:0574-86587131 www.nbboye.net

插装阀用导磁套

Magnetic guide tube for cartridge valve

BYT31-13-01M

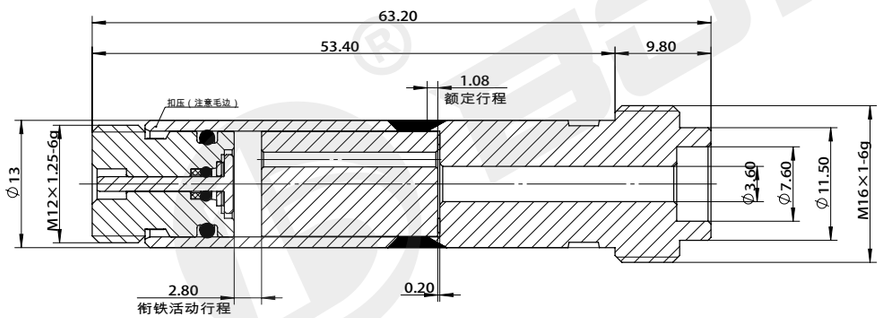

技术参数 /technical parameter					
工作油压 Working oil pressure	MPa	≤ 40	六角尺寸 Hexagon size	mm	— —

BYT32-13-01

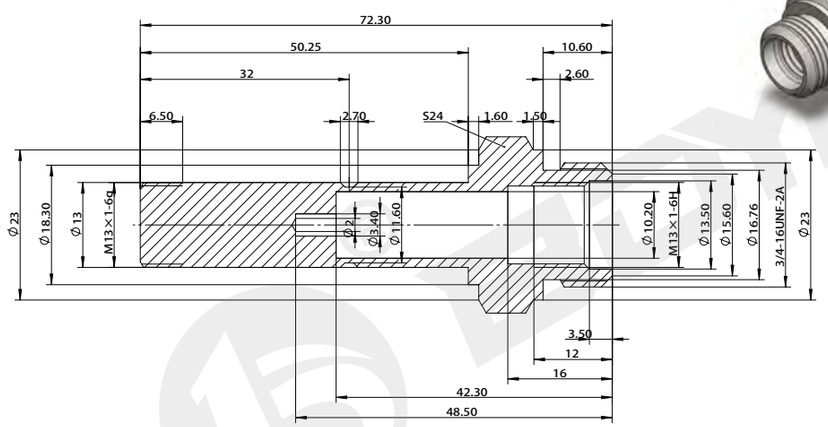

技术参数 /technical parameter					
工作油压 Working oil pressure	MPa	≤ 21	六角尺寸 Hexagon size	mm	S24

样本数据来源于试验室环境，仅供参考，贵公司如需最新数据或有特殊需求，欢迎联系搏业液压工程师。

The sample data comes from the laboratory environment and is only for reference. If your company needs the latest data or has special needs, please contact Boye hydraulic engineer.

插装阀用导磁套

Magnetic guide tube for cartridge valve

BYT33-16-01

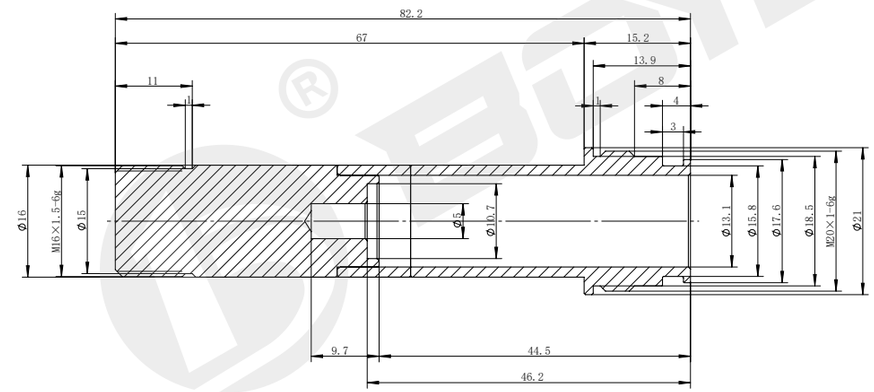

技术参数 /technical parameter					
工作油压 Working oil pressure	MPa	≤ 35	六角尺寸 Hexagon size	mm	— —

样本数据来源于试验室环境，仅供参考，贵公司如需最新数据或有特殊需求，欢迎联系搏业液压工程师。

The sample data comes from the laboratory environment and is only for reference. If your company needs the latest data or has special needs, please contact Boye hydraulic engineer.

www.nbboye.net TEL:0574-86587131

BYS特殊产品

SPECIAL PRODUCTS

- 搏业液压，BYS 系列特殊产品，主要包括各种特殊结构和用途定制电磁铁等电磁产品，广泛应用于工业、工程、农业、冶金、船舶、军工机械等领域，是实现自动化控制的关键元件，产品质量直接决定整个系统工作稳定性和可靠性。公司先后引进、消化、吸收多个国际知名品牌产品技术，经过多年积累，生产电磁铁超过 3000 万件，拥有丰富的产品研发和生产经验，产品关键指标全部实现 100% 出厂检验。
- 产品设计符合 JBT5244/VDE0580 标准。
- 标准产品若不能满足您的需求，欢迎联系搏业液压，可根据您的需求定制，欢迎咨询。

- Boye hydraulic and byt series special products mainly include electromagnetic products such as customized electromagnets with various special structures and uses. They are widely used in industries, engineering, agriculture, metallurgy, ships, military machinery and other fields. They are the key components to realize automatic control. The product quality directly determines the working stability and reliability of the whole system. The company has successively introduced, digested and absorbed the product technology of several international well-known brands. After years of accumulation, the company has produced more than 30 million electromagnets, has rich experience in product R & D and production, and all key indicators of products have achieved 100% ex factory inspection.
- The product design conforms to JBT5244 / VDE0580 standard.
- If the standard products can not meet your needs, please contact Boye hydraulic, which can be customized according to your needs. Welcome to consult.

BYS01-45-01L

双向控制阀用电磁铁

Solenoid for two-way control valve

DC 12V
DC 24V

其它规格可定做
Other can be customized

- 适用于双向控制电磁阀
- 配备手动应急装置
- 线圈全塑封工艺

- Applicable to two-way control solenoid valve
- Equipped with manual emergency device
- Full plastic sealing process of coil

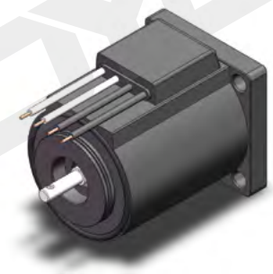

外形及连接尺寸

Outline and connection dimensions

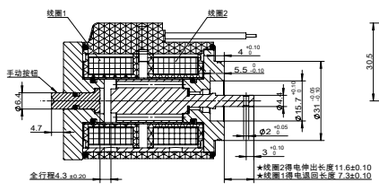

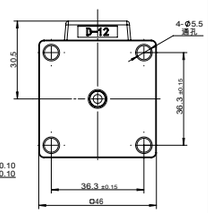

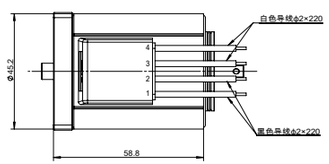

技术参数 /technical parameter Технические характеристики			
环境温度 / Ambient temperature Температураокружающей среды	°C	-25~50	
额定电压 / Rated voltage Номинальное напряжение	VDC	12	24
额定电流 / Rated current Номинальный ток	A	2.2	1.1
额定电阻 / Rated resistance Номинальное сопротивление	Ω	5.5	22
额定行程 / Rated stroke Номинальный ход	mm	2.2	
全行程 / Full stroke Полный ход	mm	4.4	
额定推力 / Rated thrust Номинальная тяга	N	12	
重复精度 / Repetition accuracy Точность повторения	%	≤ 1	
工作油压 / Working oil pressure Рабочее давление масла	MPa	≤ 21	
防护等级 / Degree of protection Степень защиты		IP65	
通电持续率 / Power on duration Длительность включения	%	100	
绝缘等级 / Insulation class Класс изоляции		H（180）	
电气连接方式 / Electrical connection mode Режим электрического подключения		四引线	

力 - 位移特性曲线

F-S characteristic curve

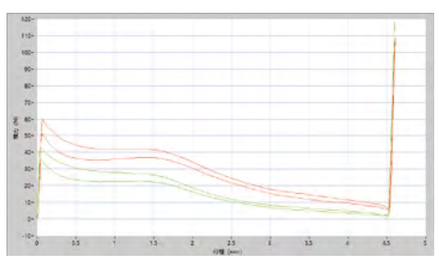

注意事项

matters needing attention

1. 线圈不得单独通电使用，有烧损风险！
2. 非防爆线圈，不得使用在有爆炸危险的介质中！
3. 线圈安装后，必须接地可靠，否则有触电危险！

1. The coil shall not be powered on alone, which has the risk of burning!
2. Non explosion-proof coil shall not be used in medium with explosion risk!
3. After the coil is installed, it must be grounded reliably, otherwise there is a risk of electric shock！

样本数据来源于试验室环境，仅供参考，贵公司如需最新数据或有特殊需求，欢迎联系搏业液压工程师。
The sample data comes from the laboratory environment and is only for reference. If your company needs the latest data or has special needs, please contact Boye hydraulic engineer.

BYS02-25-01L

电磁阀锁

Battery valve lock

DC 12V
DC 24V

其它规格可定做
Other can be customized

- 适用于电磁阀位置锁定
- 自带复位弹簧
- 线圈全塑封工艺

- Suitable for solenoid valve position locking
- Comes with return spring
- Coil full plastic sealing process

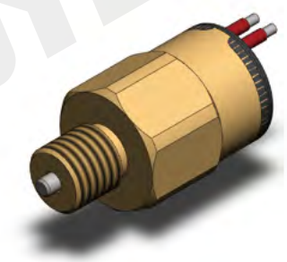

外形及连接尺寸

Outline and connection dimensions

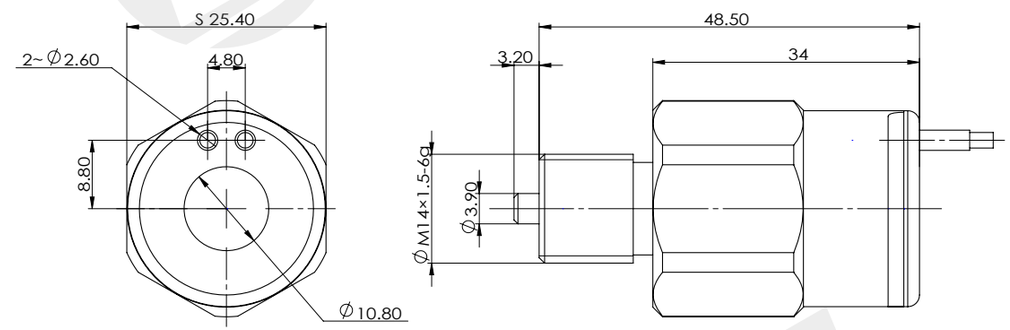

技术参数 /technical parameter		
环境温度 Ambient temperature	°C	-25~50
电压波动范围 Voltage fluctuation range	%	85~110
额定功率 Rated power	W	4
额定行程 Rated stroke	mm	3.2
防护等级 Degree of protection		IP67
操作频率 Operating frequency	T/h	12000
通电持续率 Power on duration	%	100
绝缘等级 Insulation class		H(180)
电气连接方式 Electrical connection mode		双引线

注意事项

matters needing attention

1. 线圈不得单独通电使用，有烧损风险！
2. 非防爆线圈，不得使用在有爆炸危险的介质中！
3. 线圈安装后，必须接地可靠，否则有触电危险！

1. The coil shall not be powered on alone, which has the risk of burning!
2. Non explosion-proof coil shall not be used in medium with explosion risk!
3. After the coil is installed, it must be grounded reliably, otherwise there is a risk of electric shock！

样本数据来源于试验室环境，仅供参考，贵公司如需最新数据或有特殊需求，欢迎联系搏业液压工程师。
The sample data comes from the laboratory environment and is only for reference. If your company needs the latest data or has special needs, please contact Boye hydraulic engineer.

BYS02-25A-01L

电磁阀锁
Battery valve lock

DC 12V
DC 24V

其它规格可定做
Other can be customized

- 适用于电磁阀位置锁定
- 自带复位弹簧
- 线圈注胶工艺

- Suitable for solenoid valve position locking
- Comes with return spring
- Coil Potting Process

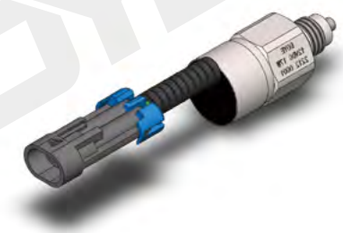

外形及连接尺寸
Outline and connection dimensions

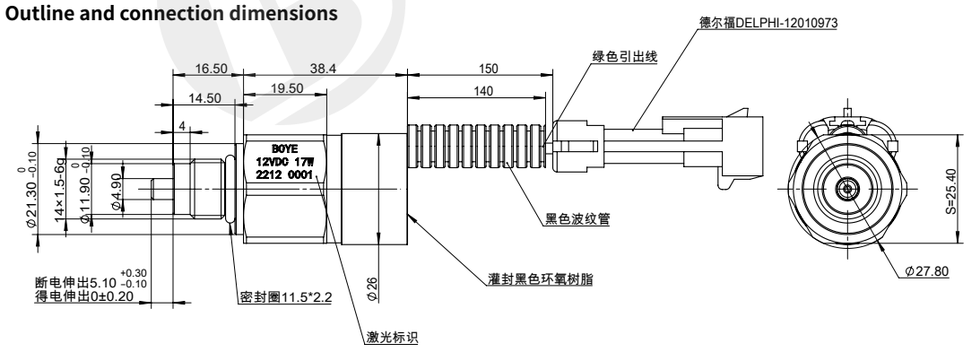

注意事项
matters needing attention

1. 线圈不得单独通电使用，有烧损风险！
2. 非防爆线圈，不得使用在有爆炸危险的介质中！
3. 线圈安装后，必须接地可靠，否则有触电危险！

1. The coil shall not be powered on alone, which has the risk of burning!
2. Non explosion-proof coil shall not be used in medium with explosion risk!
3. After the coil is installed, it must be grounded reliably, otherwise there is a risk of electric shock！

技术参数 /technical parameter Технические характеристики		
环境温度 Ambient temperature Температураокружающей среды	℃	-25~50
额定电压 Rated voltage Номинальное напряжение	VDC	12
额定电阻 Rated resistance Номинальное сопротивление	Ω	15.5
额定行程 Rated stroke Номинальный ход	mm	5
重复精度 Repetition accuracy Точность повторения	%	≤ 1
防护等级 Degree of protection Степень защиты		IP67
通电持续率 Power on duration Длительность включения	%	100
绝缘等级 Insulation class Класс изоляции		H（180）
电气连接方式 Electrical connection mode Режим электрического подключения		双引线

样本数据来源于试验室环境，仅供参考，贵公司如需最新数据或有特殊需求，欢迎联系搏业液压工程师。
The sample data comes from the laboratory environment and is only for reference. If your company needs the latest data or has special needs, please contact Boye hydraulic engineer.

BYS02-25A-02L

电磁阀锁
Battery valve lock

DC 12V
DC 24V

其它规格可定做
Other can be customized

- 适用于电磁阀位置锁定
- 自带复位弹簧
- 自带手动应急装置
- 线圈注胶工艺

- Suitable for solenoid valve position locking
- Comes with return spring
- Comes with manual emergency device
- Coil Potting Process

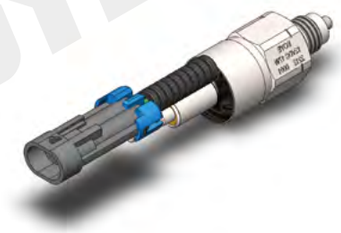

外形及连接尺寸
Outline and connection dimensions

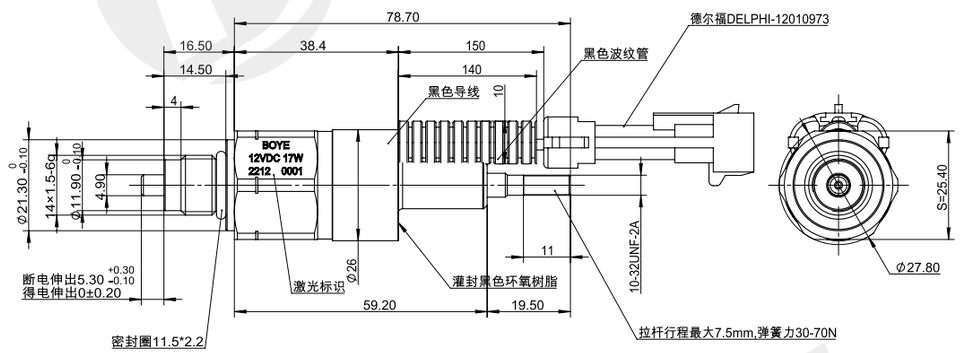

注意事项
matters needing attention

1. 线圈不得单独通电使用，有烧损风险！
2. 非防爆线圈，不得使用在有爆炸危险的介质中！
3. 线圈安装后，必须接地可靠，否则有触电危险！

1. The coil shall not be powered on alone, which has the risk of burning!
2. Non explosion-proof coil shall not be used in medium with explosion risk!
3. After the coil is installed, it must be grounded reliably, otherwise there is a risk of electric shock！

技术参数 /technical parameter Технические характеристики		
环境温度 Ambient temperature Температураокружающей среды	℃	-25~50
额定电压 Rated voltage Номинальное напряжение	VDC	12
额定电阻 Rated resistance Номинальное сопротивление	Ω	8.5
额定行程 Rated stroke Номинальный ход	mm	5
重复精度 Repetition accuracy Точность повторения	%	≤ 1
防护等级 Degree of protection Степень защиты		IP67
通电持续率 Power on duration Длительность включения	%	100
绝缘等级 Insulation class Класс изоляции		H（180）
电气连接方式 Electrical connection mode Режим электрического подключения		双引线

样本数据来源于试验室环境，仅供参考，贵公司如需最新数据或有特殊需求，欢迎联系搏业液压工程师。
The sample data comes from the laboratory environment and is only for reference. If your company needs the latest data or has special needs, please contact Boye hydraulic engineer.

TEL:0574-86587131 www.nbboye.net

BYS03-36-01G

直流湿式阀用电磁铁

DC solenoids for hydraulics valves

DC 12V
DC 24V

其它规格可定做
Other can be customized

- 适用于液压电磁换向阀
- 螺钉连接
- 配备手动应急装置

- Suitable for hydraulic solenoid directional valve
- screw connection
- Equipped with manual emergency device

外形及连接尺寸

Outline and connection dimensions

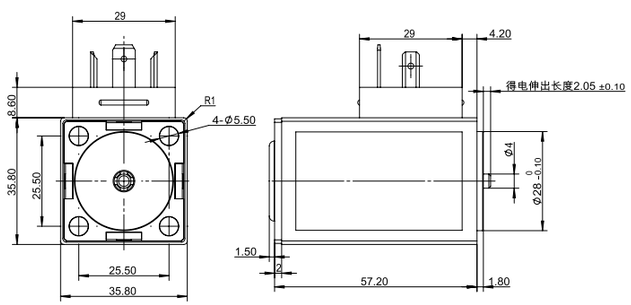

技术参数 /technical parameter		
环境温度 Ambient temperature	°C	-25~50
电压波动范围 Voltage fluctuation range	%	85~110
额定功率 Rated power	W	25
额定行程 Rated stroke	mm	2
全行程 Full stroke	mm	≥ 4.1
工作油压 Working oil pressure	Mpa	≤ 21
防护等级 Degree of protection		IP65
操作频率 Operating frequency	T/h	12000
通电持续率 Power on duration	%	100
绝缘等级 Insulation class		H(180)
电气连接方式 Electrical connection mode		DIN43650

注意事项

matters needing attention

1. 线圈不得单独通电使用，有烧损风险！
2. 非防爆线圈，不得使用在有爆炸危险的介质中！
3. 线圈安装后，必须接地可靠，否则有触电危险！

1. The coil shall not be powered on alone, which has the risk of burning!
2. Non explosion-proof coil shall not be used in medium with explosion risk!
3. After the coil is installed, it must be grounded reliably, otherwise there is a risk of electric shock！

力 - 位移特性曲线

F-S characteristic curve

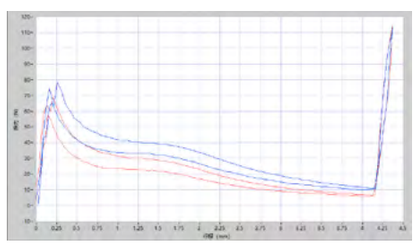

样本数据来源于试验室环境，仅供参考，贵公司如需最新数据或有特殊需求，欢迎联系搏业液压工程师。
The sample data comes from the laboratory environment and is only for reference. If your company needs the latest data or has special needs, please contact Boye hydraulic engineer.

BYS04-47-01L

双向控制阀用电磁铁

Solenoid for two-way control valve

DC 12V
DC 24V

其它规格可定做
Other can be customized

- 适用于双向控制电磁阀
- 配备手动应急装置
- 线圈全塑封工艺

- Applicable to two-way control solenoid valve
- Equipped with manual emergency device
- Full plastic sealing process of coil

外形及连接尺寸

Outline and connection dimensions

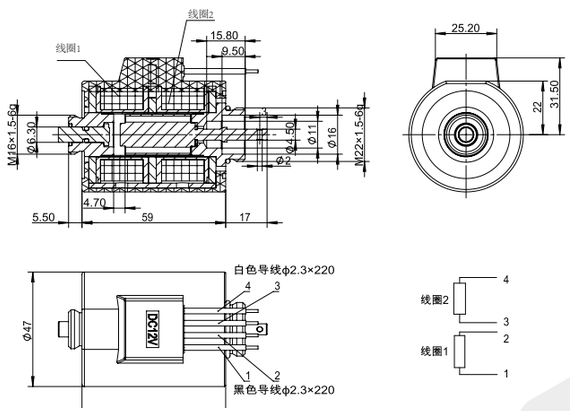

技术参数 /technical parameter Технические характеристики			
环境温度 / Ambient temperature Температураокружающей среды	°C	-25~50	
额定电压 / Rated voltage Номинальное напряжение	VDC	12	24
额定电流 / Rated current Номинальный ток	A	2.4	0.6
额定电阻 / Rated resistance Номинальное сопротивление	Ω	5	20
额定行程 / Rated stroke Номинальный ход	mm	2.3	
全行程 / Full stroke Полный ход	mm	4.7	
额定推力 / Rated thrust Номинальная тяга	N	12	
重复精度 / Repetition accuracy Точность повторения	%	≤ 1	
工作油压 / Working oil pressure Рабочее давление масла	MPa	≤ 21	
防护等级 / Degree of protection Степень защиты		IP65	
通电持续率 / Power on duration Длительность включения	%	100	
绝缘等级 / Insulation class Класс изоляции		H（180）	
电气连接方式 / Electrical connection mode Режим электрического подключения		四引线	

注意事项

matters needing attention

1. 线圈不得单独通电使用，有烧损风险！
2. 非防爆线圈，不得使用在有爆炸危险的介质中！
3. 线圈安装后，必须接地可靠，否则有触电危险！

1. The coil shall not be powered on alone, which has the risk of burning!
2. Non explosion-proof coil shall not be used in medium with explosion risk!
3. After the coil is installed, it must be grounded reliably, otherwise there is a risk of electric shock！

力 - 位移特性曲线

F-S characteristic curve

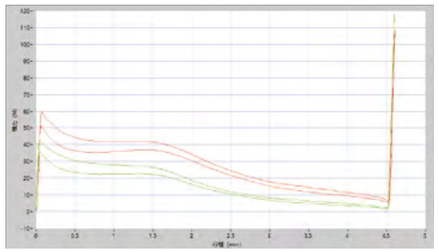

样本数据来源于试验室环境，仅供参考，贵公司如需最新数据或有特殊需求，欢迎联系搏业液压工程师。
The sample data comes from the laboratory environment and is only for reference. If your company needs the latest data or has special needs, please contact Boye hydraulic engineer.

BYS05-45-01G

双向控制阀用电磁铁

Solenoid for two-way control valve

DC 12V
DC 24V

其它规格可定做
Other can be customized

- 适用于双向控制电磁阀
- 配备手动应急装置
- 线圈全塑封工艺（注胶）

- Applicable to two-way control solenoid valve
- Equipped with manual emergency device
- Full plastic sealing process of coil

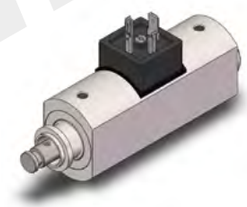

外形及连接尺寸

Outline and connection dimensions

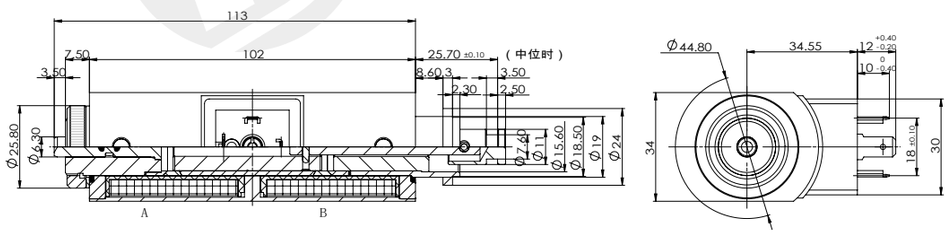

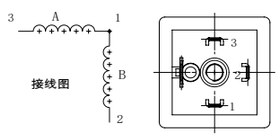

技术参数 /technical parameter		
环境温度 Ambient temperature	℃	-25~50
电压波动范围 Voltage fluctuation range	%	85~110
额定功率 Rated power	W	54
额定行程 Rated stroke	mm	3.7
全行程 Full stroke	mm	⩾ 7.4
工作油压 Working oil pressure	Mpa	⩽ 35
防护等级 Degree of protection		IP65
操作频率 Operating frequency	T/h	12000
通电持续率 Power on duration	%	100
绝缘等级 Insulation class		H(180)
电气连接方式 Electrical connection mode		DIN43650

注意事项

matters needing attention

1. 线圈不得单独通电使用，有烧损风险！
2. 非防爆线圈，不得使用在有爆炸危险的介质中！
3. 线圈安装后，必须接地可靠，否则有触电危险！

1. The coil shall not be powered on alone, which has the risk of burning!
2. Non explosion-proof coil shall not be used in medium with explosion risk!
3. After the coil is installed, it must be grounded reliably, otherwise there is a risk of electric shock！

样本数据来源于试验室环境，仅供参考，贵公司如需最新数据或有特殊需求，欢迎联系搏业液压工程师。
The sample data comes from the laboratory environment and is only for reference. If your company needs the latest data or has special needs, please contact Boye hydraulic engineer.

BYS07-40-01T

隔爆型防爆电磁铁

Explosion-proof explosion-proof

DC 12V

其它规格可定做
Other can be customized

- 适用于矿用隔爆双向控制电磁阀
- 配备手动应急装置
- 配备低功耗芯片

- Suitable for mine explosion-proof two-way control solenoid valve
- Equipped with manual emergency device
- Equipped with low power consumption chip

外形及连接尺寸

Outline and connection dimensions

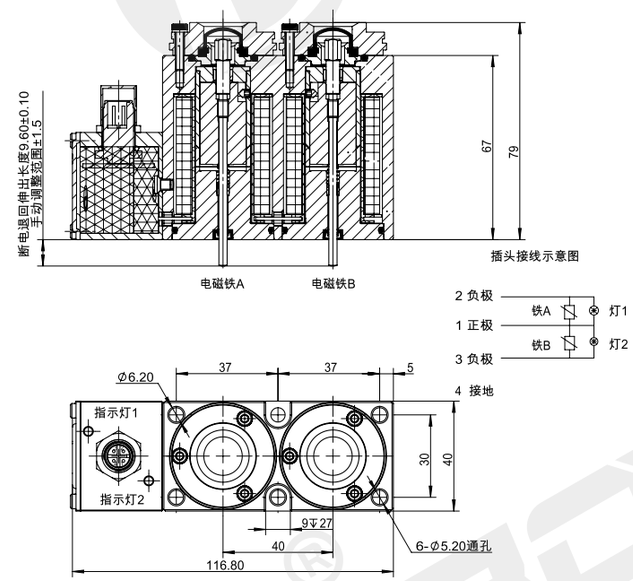

技术参数 /technical parameter		
环境温度 Ambient temperature	℃	-25~50
电压波动范围 Voltage fluctuation range	%	85~110
额定功率 Rated power	W	2
额定行程 Rated stroke	mm	1.2
全行程 Full stroke	mm	⩾ 2.2
工作油压 Working oil pressure	Mpa	⩽ 21
防护等级 Degree of protection		IP67
操作频率 Operating frequency	T/h	12000
通电持续率 Power on duration	%	100
绝缘等级 Insulation class		H(180)
电气连接方式 Electrical connection mode		四芯航空插头

注意事项

matters needing attention

1. 线圈不得单独通电使用，有烧损风险！
2. 非防爆线圈，不得使用在有爆炸危险的介质中！
3. 线圈安装后，必须接地可靠，否则有触电危险！

1. The coil shall not be powered on alone, which has the risk of burning!
2. Non explosion-proof coil shall not be used in medium with explosion risk!
3. After the coil is installed, it must be grounded reliably, otherwise there is a risk of electric shock！

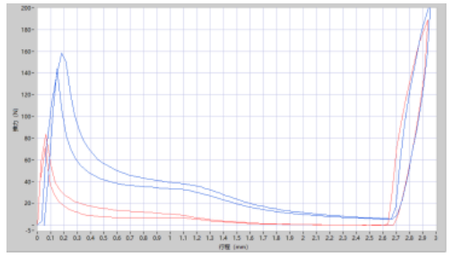

样本数据来源于试验室环境，仅供参考，贵公司如需最新数据或有特殊需求，欢迎联系搏业液压工程师。
The sample data comes from the laboratory environment and is only for reference. If your company needs the latest data or has special needs, please contact Boye hydraulic engineer.

BYS08-31-01L

多路阀用电磁铁
Electromagnet for Multi-Way Valve

DC 12V
DC 24V

其它规格可定做
Other can be customized

- 适用于电磁多路阀
- 自带复位弹簧
- 线圈全塑封工艺

- Applicable to solenoid multi-way valves
- Comes with return spring
- Coil full plastic sealing process

外形及连接尺寸
Outline and connection dimensions

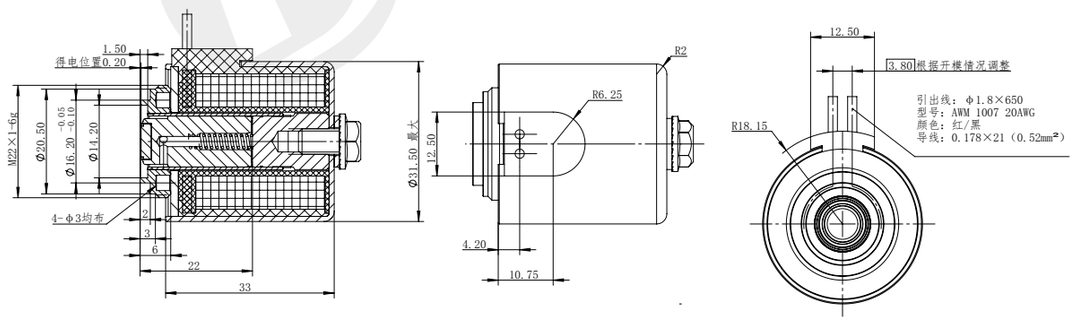

注意事项
matters needing attention

1. 线圈不得单独通电使用，有烧损风险！
2. 非防爆线圈，不得使用在有爆炸危险的介质中！
3. 线圈安装后，必须接地可靠，否则有触电危险！

1. The coil shall not be powered on alone, which has the risk of burning!
2. Non explosion-proof coil shall not be used in medium with explosion risk!
3. After the coil is installed, it must be grounded reliably, otherwise there is a risk of electric shock！

技术参数 /technical parameter		
环境温度 Ambient temperature	℃	-25~50
电压波动范围 Voltage fluctuation range	%	85~110
额定功率 Rated power	W	22
额定行程 Rated stroke	mm	2
全行程 Full stroke	mm	——
工作油压 Working oil pressure	Mpa	≤ 12
防护等级 Degree of protection		IP65
操作频率 Operating frequency	T/h	12000
通电持续率 Power on duration	%	100
绝缘等级 Insulation class		H(180)
电气连接方式 Electrical connection mode		双引线

样本数据来源于试验室环境，仅供参考，贵公司如需最新数据或有特殊需求，欢迎联系搏业液压工程师。
The sample data comes from the laboratory environment and is only for reference. If your company needs the latest data or has special needs, please contact Boye hydraulic engineer.

BYS09-25-01L

多路阀用电磁铁
Electromagnet for Multi-Way Valve

DC 12V
DC 24V

其它规格可定做
Other can be customized

- 适用于电磁多路阀
- 自带复位弹簧
- 自带手动应急装置
- 线圈全塑封工艺

- Applicable to solenoid multi-way valves
- Comes with return spring
- Comes with manual emergency device
- Coil full plastic sealing process

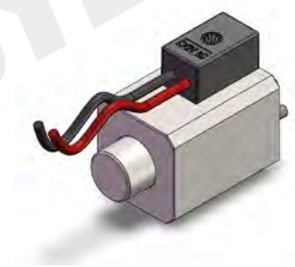

外形及连接尺寸
Outline and connection dimensions

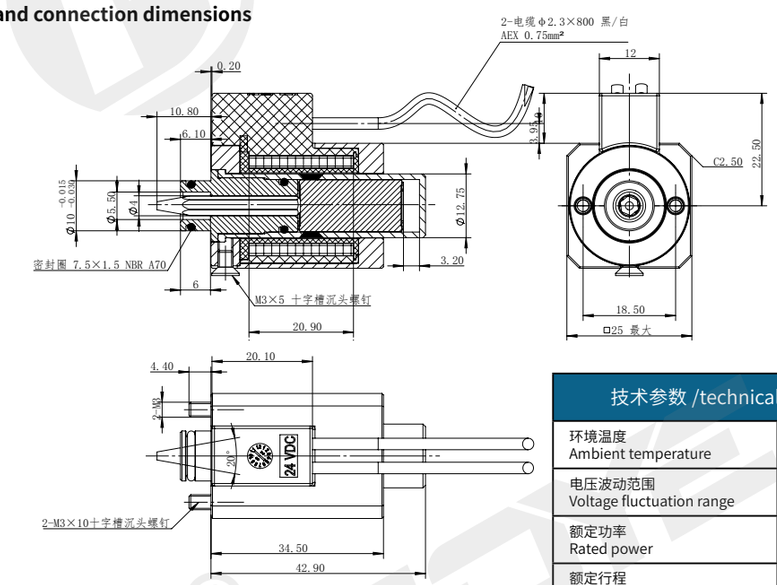

注意事项
matters needing attention

1. 线圈不得单独通电使用，有烧损风险！
2. 非防爆线圈，不得使用在有爆炸危险的介质中！
3. 线圈安装后，必须接地可靠，否则有触电危险！

1. The coil shall not be powered on alone, which has the risk of burning!
2. Non explosion-proof coil shall not be used in medium with explosion risk!
3. After the coil is installed, it must be grounded reliably, otherwise there is a risk of electric shock！

技术参数 /technical parameter		
环境温度 Ambient temperature	℃	-25~50
电压波动范围 Voltage fluctuation range	%	85~110
额定功率 Rated power	W	11
额定行程 Rated stroke	mm	1.65
全行程 Full stroke	mm	⩾ 3.2
工作油压 Working oil pressure	Mpa	≤ 12
防护等级 Degree of protection		IP67
操作频率 Operating frequency	T/h	12000
通电持续率 Power on duration	%	100
绝缘等级 Insulation class		H(180)
电气连接方式 Electrical connection mode		双引线

样本数据来源于试验室环境，仅供参考，贵公司如需最新数据或有特殊需求，欢迎联系搏业液压工程师。
The sample data comes from the laboratory environment and is only for reference. If your company needs the latest data or has special needs, please contact Boye hydraulic engineer.

BYS10-62-01G

计量泵用电磁铁
Electromagnet for metering pump

AC 110V
AC 220V

其它规格可定做
Other can be customized

- 适用于电磁膈膜计量泵高速开关阀
- 自带复位弹簧
- 线圈全塑封工艺

- Suitable for high-speed switching valves of electromagnetic diaphragm metering pumps
- Comes with return spring
- Coil full plastic sealing process

外形及连接尺寸
Outline and connection dimensions

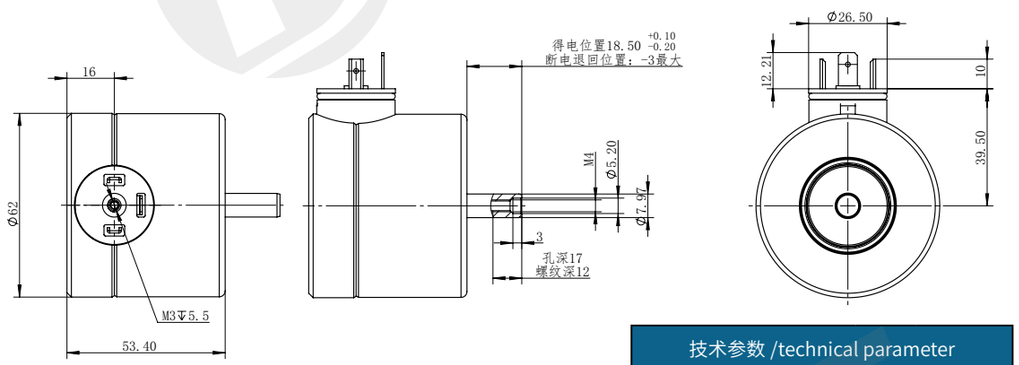

技术参数 /technical parameter		
环境温度 Ambient temperature	°C	0~40
电压波动范围 Voltage fluctuation range	%	85~110
额定功率 Rated power	W	24
额定行程 Rated stroke	mm	4.5
全行程 Full stroke	mm	——
工作油压 Working oil pressure	Mpa	——
防护等级 Degree of protection		IP65
操作频率 Operating frequency	T/h	21600
通电持续率 Power on duration	%	25
绝缘等级 Insulation class		H(180)
电气连接方式 Electrical connection mode		DIN43650

注意事项
matters needing attention

1. 线圈不得单独通电使用，有烧损风险！
2. 非防爆线圈，不得使用在有爆炸危险的介质中！
3. 线圈安装后，必须接地可靠，否则有触电危险！

1. The coil shall not be powered on alone, which has the risk of burning!
2. Non explosion-proof coil shall not be used in medium with explosion risk!
3. After the coil is installed, it must be grounded reliably, otherwise there is a risk of electric shock！

样本数据来源于试验室环境，仅供参考，贵公司如需最新数据或有特殊需求，欢迎联系搏业液压工程师。
The sample data comes from the laboratory environment and is only for reference. If your company needs the latest data or has special needs, please contact Boye hydraulic engineer.

BYS10-73-01G

计量泵用电磁铁
Electromagnet for metering pump

AC 110V
AC 220V

其它规格可定做
Other can be customized

- 适用于电磁膈膜计量泵高速开关阀
- 自带复位弹簧
- 自带手动应急装置
- 线圈全塑封工艺

- Suitable for high-speed switching valves of electromagnetic diaphragm metering pumps
- Comes with return spring
- Comes with manual emergency device
- Coil full plastic sealing process

外形及连接尺寸
Outline and connection dimensions

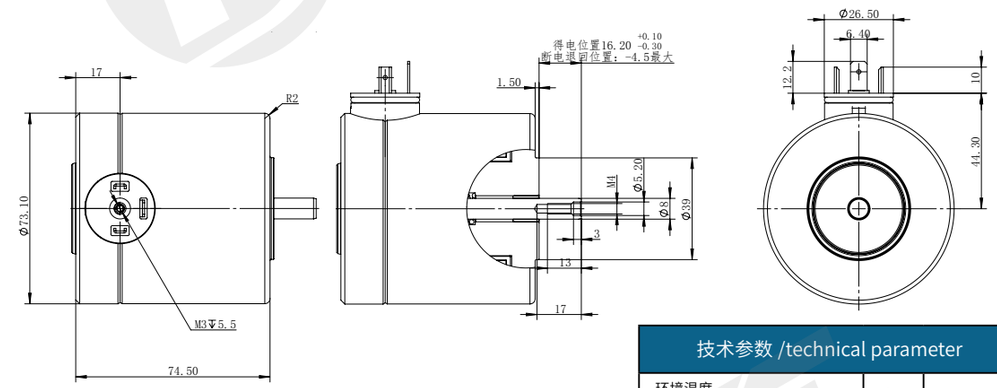

技术参数 /technical parameter		
环境温度 Ambient temperature	°C	0~40
电压波动范围 Voltage fluctuation range	%	85~110
额定功率 Rated power	W	24
额定行程 Rated stroke	mm	4.5
全行程 Full stroke	mm	——
工作油压 Working oil pressure	Mpa	——
防护等级 Degree of protection		IP65
操作频率 Operating frequency	T/h	21600
通电持续率 Power on duration	%	13.3
绝缘等级 Insulation class		H(180)
电气连接方式 Electrical connection mode		DIN43650

注意事项
matters needing attention

1. 线圈不得单独通电使用，有烧损风险！
2. 非防爆线圈，不得使用在有爆炸危险的介质中！
3. 线圈安装后，必须接地可靠，否则有触电危险！

1. The coil shall not be powered on alone, which has the risk of burning!
2. Non explosion-proof coil shall not be used in medium with explosion risk!
3. After the coil is installed, it must be grounded reliably, otherwise there is a risk of electric shock！

样本数据来源于试验室环境，仅供参考，贵公司如需最新数据或有特殊需求，欢迎联系搏业液压工程师。
The sample data comes from the laboratory environment and is only for reference. If your company needs the latest data or has special needs, please contact Boye hydraulic engineer.

BYS11-38-01D

多路阀用电磁铁
Electromagnet for multi-way valve

DC 12V
DC 24V

其它规格可定做
Other can be customized

- 适用于电磁多路阀
- 自带复位弹簧

- Suitable for electromagnetic multi-way valves
- Comes with return spring

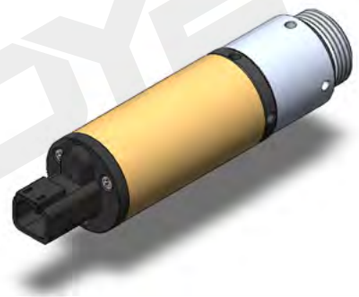

外形及连接尺寸
Outline and connection dimensions

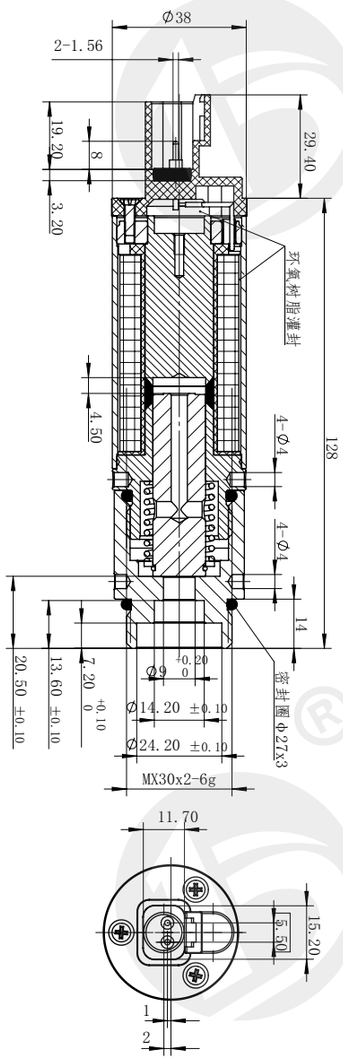

技术参数 /technical parameter		
环境温度 Ambient temperature	℃	-25~50
电压波动范围 Voltage fluctuation range	%	85 ～ 110
额定功率 Rated power	W	56.3
额定行程 Rated stroke	mm	4.5
全行程 Full stroke	mm	⩾ 4.5
工作油压 Working oil pressure	Mpa	⩽ 20
防护等级 Degree of protection		IP54
操作频率 Operating frequency	T/h	12000
通电持续率 Power on duration	%	100
绝缘等级 Insulation class		H(180)
电气连接方式 Electrical connection mode		AMP 9X0.5

力 - 位移特性曲线
F-S characteristic curve

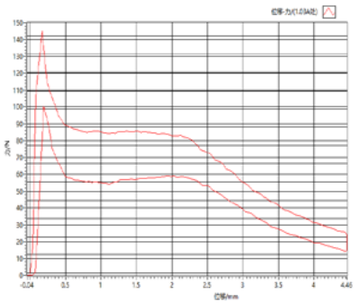

样本数据来源于试验室环境，仅供参考，贵公司如需最新数据或有特殊需求，欢迎联系搏业液压工程师。
The sample data comes from the laboratory environment and is only for reference. If your company needs the latest data or has special needs, please contact Boye hydraulic engineer.

BYS11-38-01T

多路阀用电磁铁
Electromagnet for multi-way valve

DC 12V
DC 24V

其它规格可定做
Other can be customized

- 适用于电磁多路阀
- 自带复位弹簧

- Suitable for electromagnetic multi-way valves
- Comes with return spring

外形及连接尺寸
Outline and connection dimensions

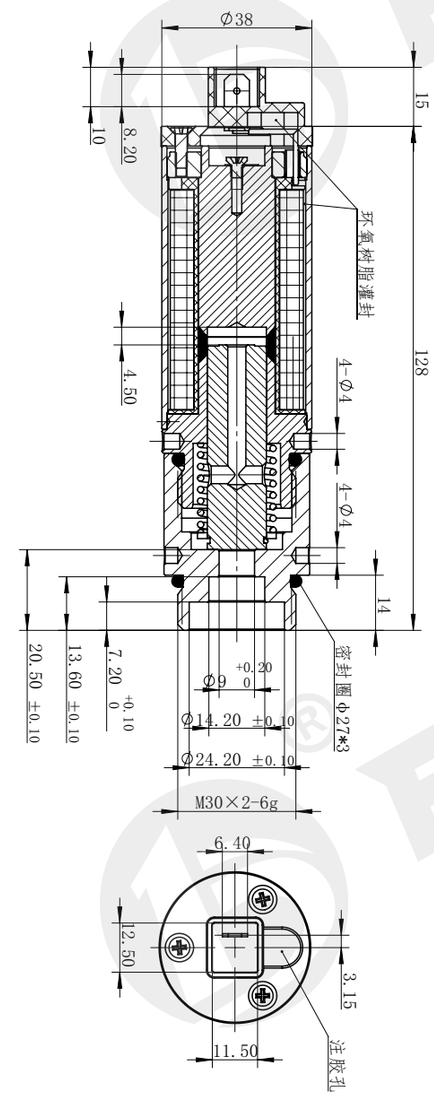

技术参数 /technical parameter		
环境温度 Ambient temperature	℃	-25~50
电压波动范围 Voltage fluctuation range	%	85 ～ 110
额定功率 Rated power	W	56.3
额定行程 Rated stroke	mm	4.5
全行程 Full stroke	mm	⩾ 4.5
工作油压 Working oil pressure	Mpa	⩽ 30
防护等级 Degree of protection		IP54
操作频率 Operating frequency	T/h	12000
通电持续率 Power on duration	%	100
绝缘等级 Insulation class		H(180)
电气连接方式 Electrical connection mode		DT04-2P

力 - 位移特性曲线
F-S characteristic curve

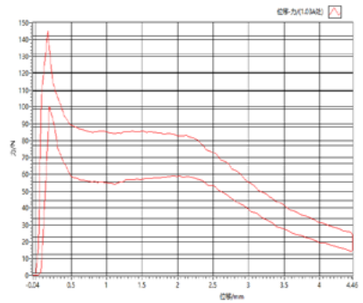

样本数据来源于试验室环境，仅供参考，贵公司如需最新数据或有特殊需求，欢迎联系搏业液压工程师。
The sample data comes from the laboratory environment and is only for reference. If your company needs the latest data or has special needs, please contact Boye hydraulic engineer.

TEL:0574-86587131
www.nbboye.net

BYS12-35-01LD

多路阀用电磁铁
Electromagnet for multi-way valve

DC 12V
DC 24V

其它规格可定做
Other can be customized

- 适用于电磁多路阀
- 自带复位弹簧
- 线圈全塑封工艺

- Suitable for electromagnetic multi-way valves
- Comes with return spring
- Coil full plastic sealing process

外形及连接尺寸
Outline and connection dimensions

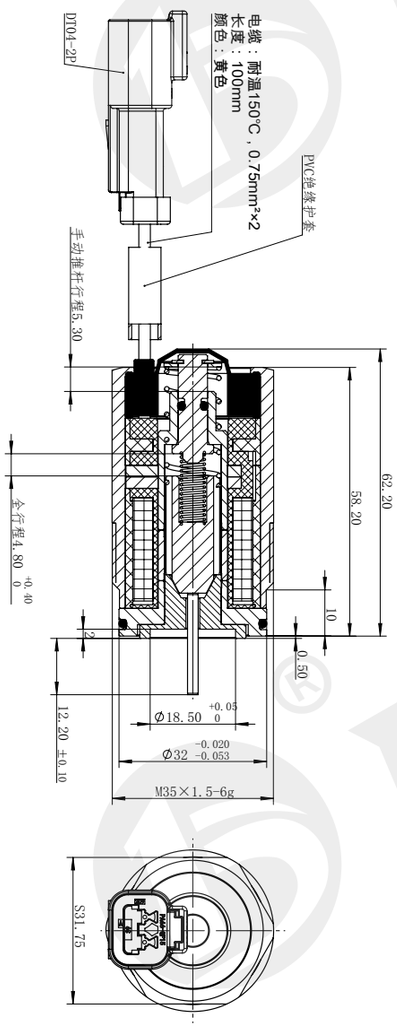

技术参数 /technical parameter		
环境温度 Ambient temperature	°C	-25~50
电压波动范围 Voltage fluctuation range	%	85～110
额定功率 Rated power	W	18
额定行程 Rated stroke	mm	——
全行程 Full stroke	mm	⩾5
工作油压 Working oil pressure	Mpa	⩽21
防护等级 Degree of protection		IP67
操作频率 Operating frequency	T/h	12000
通电持续率 Power on duration	%	100
绝缘等级 Insulation class		H(180)
电气连接方式 Electrical connection mode		双引线 +DT04-2P

力 - 位移特性曲线
F-S characteristic curve

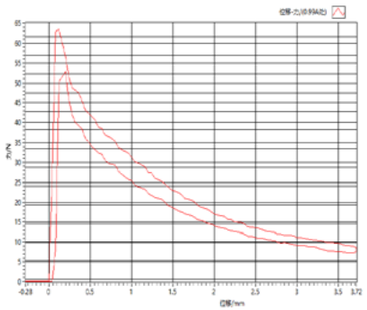

样本数据来源于试验室环境，仅供参考，贵公司如需最新数据或有特殊需求，欢迎联系搏业液压工程师。
The sample data comes from the laboratory environment and is only for reference. If your company needs the latest data or has special needs, please contact Boye hydraulic engineer.

BYS15-12-01L

微型电磁铁
Miniature Electromagnet

DC 12V
DC 24V

其它规格可定做
Other can be customized

- 适用于电磁泵用先导阀
- 线圈注胶工艺

- Applicable to pilot valves for electromagnetic pumps
- Coil potting process

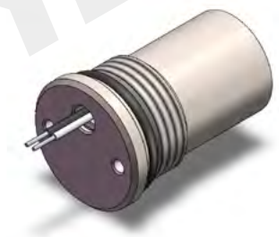

外形及连接尺寸
Outline and connection dimensions

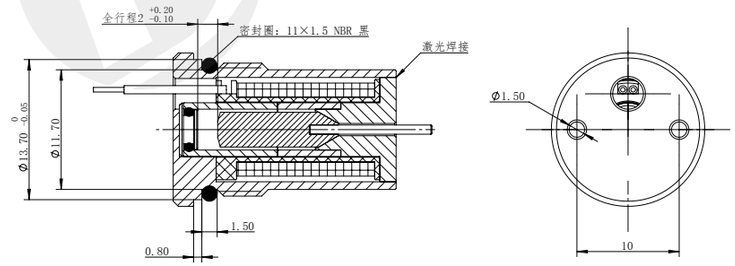

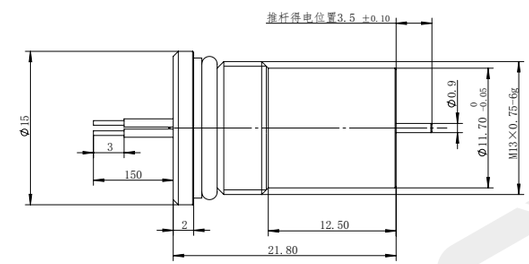

技术参数 /technical parameter		
环境温度 Ambient temperature	°C	-25~50
电压波动范围 Voltage fluctuation range	%	85～110
额定功率 Rated power	W	2
额定行程 Rated stroke	mm	——
全行程 Full stroke	mm	⩾2
工作油压 Working oil pressure	Mpa	——
防护等级 Degree of protection		IP65
操作频率 Operating frequency	T/h	12000
通电持续率 Power on duration	%	100
绝缘等级 Insulation class		H(180)
电气连接方式 Electrical connection mode		双引线

注意事项
matters needing attention

1. 线圈不得单独通电使用，有烧损风险！
2. 非防爆线圈，不得使用在有爆炸危险的介质中！
3. 线圈安装后，必须接地可靠，否则有触电危险！

1. The coil shall not be powered on alone, which has the risk of burning!
2. Non explosion-proof coil shall not be used in medium with explosion risk!
3. After the coil is installed, it must be grounded reliably, otherwise there is a risk of electric shock！

样本数据来源于试验室环境，仅供参考，贵公司如需最新数据或有特殊需求，欢迎联系搏业液压工程师。
The sample data comes from the laboratory environment and is only for reference. If your company needs the latest data or has special needs, please contact Boye hydraulic engineer.

TEL:0574-86587131 www.nbboye.net

BYS16-30-01MLT/02MLT

高速开关阀用电磁铁

Electromagnet for high-speed switching valve

DC 12V
DC 24V

其它规格可定做
Other can be customized

- 适用于高速开关阀
- 自带复位弹簧
- 自带手动应急装置
- 线圈全塑封工艺

- Applicable to high-speed on-off valves
- Comes with return spring
- Built-in manual emergency device
- Coil full plastic sealing process

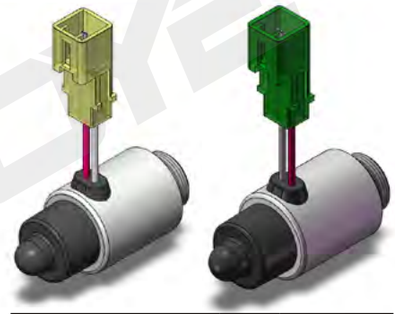

外形及连接尺寸

Outline and connection dimensions

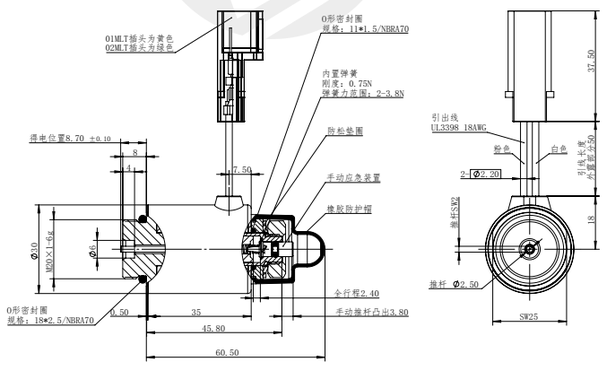

技术参数 /technical parameter		
环境温度 Ambient temperature	℃	-25~50
电压波动范围 Voltage fluctuation range	%	85～110
额定功率 Rated power	W	17
额定行程 Rated stroke	mm	0.5
全行程 Full stroke	mm	≥ 2.4
工作油压 Working oil pressure	Mpa	≤ 10
防护等级 Degree of protection		IP67
操作频率 Operating frequency	T/h	12000
通电持续率 Power on duration	%	100
绝缘等级 Insulation class		H(180)
电气连接方式 Electrical connection mode		双引线 +KET118 2M

注意事项

matters needing attention

1. 线圈不得单独通电使用，有烧损风险！
2. 非防爆线圈，不得使用在有爆炸危险的介质中！
3. 线圈安装后，必须接地可靠，否则有触电危险！

1. The coil shall not be powered on alone, which has the risk of burning!
2. Non explosion-proof coil shall not be used in medium with explosion risk!
3. After the coil is installed, it must be grounded reliably, otherwise there is a risk of electric shock !

力 - 位移特性曲线

F-S characteristic curve

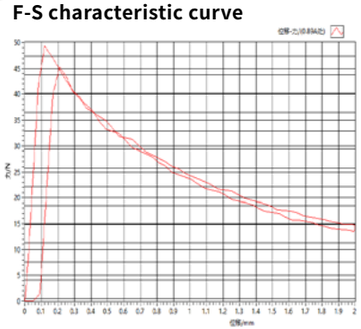

样本数据来源于试验室环境，仅供参考，贵公司如需最新数据或有特殊需求，欢迎联系博业液压工程师。
The sample data comes from the laboratory environment and is only for reference. If your company needs the latest data or has special needs, please contact Boye hydraulic engineer.

电磁铁使用注意事项

Product Selection Guide

- **工作电压：**确保供电电源形式正确，供电电压在允许范围内。
  Working voltage: Ensure that the power supply form is correct and the power supply voltage is within the allowable range
- **线圈通电：**电磁铁线圈不得单独长期通电使用，有烧损风险。
  Coil electrification: Electromagnetic iron coils should not be used alone for long-term electrification, as there is a risk of burning.
- **工作压力：**电磁铁导磁套工作压力不得超过耐压的额定值，有损坏和安全风险。
  Working pressure: The working pressure of the electromagnetic magnetic sleeve should not exceed the rated pressure resistance, which poses a risk of damage and safety.
- **手动推杆使用：**在调试或紧急情况下，可使用手动推杆进行手动控制，但应避免使用冲击力。
  Manual plunger use: Manual control can be achieved using the manual plunger during debugging or emergencies, but avoid using impact force.
- **双向使用：**当双向使用电磁铁时，确保两个电磁铁不能同时通电，电控系统应设置互锁装置。
  Bidirectional use: When using solenoids idirectionally, ensure both solenoids cannot be energized simultaneously, and the electrical control system should have interlocking devices.
- **非防爆线圈：**不得使用在有爆炸危险的环境中！
  Non-explosion-proof coil: Do not use in explosive environments!
- **高电压线圈：**安装时必须接地可靠，否者有**触电危险！**
  High-voltage coil: It must be reliably grounded during installation,otherwise there is a **risk of electric shock!**

样本数据来源于试验室环境，仅供参考，贵公司如需最新数据或有特殊需求，欢迎联系博业液压工程师。
The sample data comes from the laboratory environment and is only for reference. If your company needs the latest data or has special needs, please contact Boye hydraulic engineer.